Installation Manual:

Flatbed Safety Solutions

Truck Netting Systems

Classic Free Standing: TN-BASE-FREE-53FT

Pivot Free Standing: TN-PIVOT-FREE-53FT

Pivoting Portable: TN-BASE-PORT-53FT

Fixed Base Portable: TN-PIVOT-PORT-53FT

Classic Column Mount: TN-COL-53FT

Flange Mount: TN-FLG-53FT

Wall Mounted: TN-GAP-53FT

This Installation Manual is intended to meet the manufacturer's instructions requirements and should be used as part of an employee training program.

WARNINGS AND CONDITIONS

These instructions must be provided to the installer of this system. The installer must read and understand these instructions and follow.

Failure to follow these instructions and the details of the unique layout drawing provided may result in serious injury or death. If you have any questions about this system's use or care, please contact the manufacturer: 1-800-977-2005.

Table of Contents

Installation Warnings & Policy.....2
Components.....3
Installation of Classic Free Standing Truck Netting System - TN-BASE-FREE-53FT.....4
Installation of Pivoting Free Standing Truck Netting System - TN-PIVOT-FREE-53FT.....8
Installation of Fixed Base Portable Truck Netting System - TN-BASE-PORT-53FT.....14
Installation of Pivoting Portable Truck Netting System - TN-PIVOT-PORT-53FT.....18
Installation of Column Mount Truck Netting System - TN-COL-4-6-53FT.....24
Installation of Flange Mount Truck Netting System - TN-FLG-6-8X1-2-53FT.....28
Installation of Wall Mounted Truck Netting System - TN-GAP-53FT.....32

WARNING IMPROPER USE OR INSTALLATION OF THIS EQUIPMENT MAY CAUSE INJURY OR DEATH

DO NOT LEAN ON THE NETTING.
DO NOT STAND OR CLIMB ON THE NETTING.
DO NOT USE NETTING AS A TIE-OFF POINT.
DO NOT USE IF ANY COMPONENT IS FOUND DEFECTIVE OR DAMAGED.

DO read and follow this document (installation manual).

Flatbed Safety Solutions are designed and are to be used only for their intended purpose. The use of these netting systems or their components for any other purpose may cause injury or death.

Flatbed Safety Solutions by Liftsafe Fall Protection Inc. & Factory Supply are designed and engineered to prevent falls while working on flatbed trucks. Liftsafe Fall Protection Inc. & Factory Supply does not accept any responsibility for systems that do not follow the enclosed instructions or those that do not use the hardware provided.

These instructions comprise a general installation procedure for the erection of a Flatbed Safety System. It is the position of Liftsafe Fall Protection Inc. & Factory Supply that these types of systems should be installed by a certified, trained installation team. In the event that the customer installs the system themselves, the entire system (nets, cables, etc.) must be inspected regularly by a supervisor to ensure that:
Snap hooks are in place and are positioned a maximum of 24” apart along cable and rope border.

- Netting panels DO NOT exhibit any damage whatsoever.
- System components are NOT damaged in any way.

Liftsafe Fall Protection Inc. & Factory Supply Inc. are not responsible for the quality of install preformed by a client after delivery. All netting systems must be inspected regularly.

Note: Net panels should be inspected yearly for any damage, and replaced after 7 years when indoors and not exposed to the elements. Net panels that are outdoor and exposed to the elements should be replaced after 2-3 years.

Net hadware including wire ropes, clips or support columns should be inspected yearly for any damage.

Figure 1 - Components

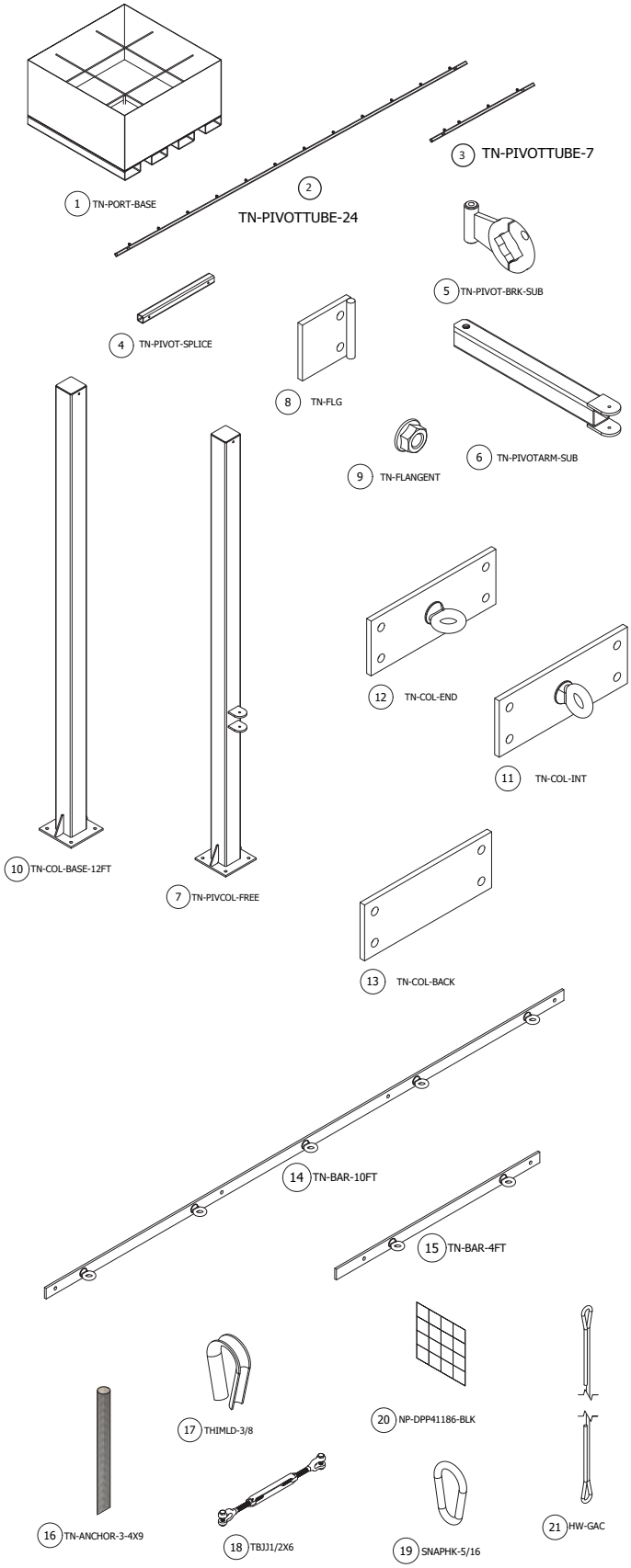

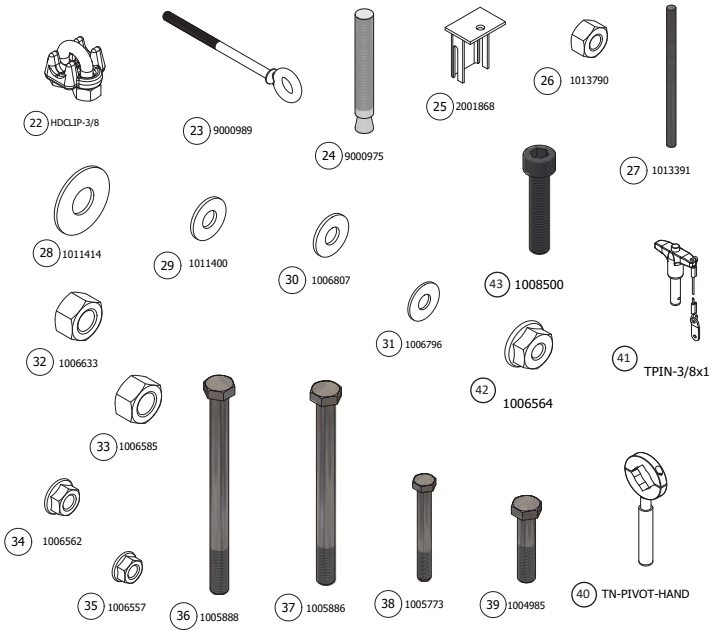

#	PART NUMBER	DESCRIPTION
1.	TN-PORT-BASE	TRUCKNET PORTABLE BASE
2.	TN-PIVOTTUBE-24	PIVOT TUBE 24 FT
3.	TN-PIVOTTUBE-7	PIVOT TUBE 7 FT
4.	TN-PIVOT-SPLICE	TRUCKNET COMPRESSION BAR SPLICE
5.	TN-PIVOT-BRK-SUB	TRUCKNET PIVOT BRACKET SUBASSEMBLY
6.	TN-PIVOT-ARM-SUB	TRUCKNET PIVOT ARM SUBASSEMBLY
7.	TN-PIVCOL-FREE	TRUCKNET PIVOT COLUMN FREESTANDING
8.	TN-FLG	TRUCKNET FLANGE BRACKET
9.	TN-FLANGENT	HX NT FLNG - 1/2-13
10.	TN-COL-BASE-12FT	TRUCKNET COLUMN 12FT
11.	TN-COL-INT	TRUCKNET COLUMN BRACKET FRONT MID
12.	TN-COL-END	TRUCKNET COLUMN BRACKET FRONT ENDS
13.	TN-COL-BACK	TRUCKNET COLUMN BRACKET BACK
14.	TN-BAR-10FT	TRUCKNET GAP BAR MOUNT 10 FT
15.	TN-BAR-4FT	TRUCKNET GAP BAR MOUNT 4 FT
16.	TN-ANCHOR-3-4X9	ANCHOR- 3/4-10 X 9"
17.	THIMLD-3/8	THIMBLE, LD, 3/8"
18.	TBJJ1/2X6	TURNBUCKLE, JAW & JAW, 1/2" X 6"
19.	SNAPHK-5/16	SNAP HOOK, CARBINE, 5/16"
20.	HW-NET-53FT	NET PANEL, 2", DPP41186, [XX] X 53'0", BLACK, WEB
21.	HW-GAC	AIRCRAFT CABLE - 3/8 - 56 FT LONG
22.	HDCLIP-3/8	CLIP, WIRE ROPE, HD, DF, 3/8"
23.	9000989	EYEBOLT-SHOULDER-1/2-13X8
24.	9000975	WEDGE ANCHOR 1-2 X 3 3-4
25.	2001868	WELDMENT, STAKE POCKET
26.	1013790	HEAVY HX NT - 1/2-13 PLAIN
27.	1013391	THREADED ROD 1/2-13
28.	1011414	FW - 3/4
29.	1011400	FW - 1/2
30.	1006807	FW - 1/2
31.	1006796	FW - 3/8
32.	1006633	HX NT - 1/2-13
33.	1006585	HX NT - 3/4-10
34.	1006562	HX NT FLNG - 1/2-13
35.	1006557	HX NT FLNG - 3/8-16
36.	1005888	HHCS 1/2-13 X 6.5
37.	1005886	HHCS 1/2-13 X 6
38.	1005773	HHCS 3/8-16 X 3
39.	1004985	HHCS 1/2-13 X 2.25
40.	TN-PIVOT-HAND	TRUCKNET PIVOT HANDLE
41.	TPINX3/8-1	PIN-T HANDLE LOCKING-3/8X1-W LANYARD
42.	1006564	HX NT FLNG - #10-32
43.	1008500	SHCS #10-32 X 1

WARNING **Failure to read, understand, and follow the Installation Manual may result in injury or death.**

Installation of Classic Free Standing Truck Netting System - TN-BASE-FREE-53FT

Hardware Included			
Item#	**Quantity**	**Description**	**Part#**
10	3	Truck Net 12 ft High Column	TN-COL-12FT
16	12	¾” X 6” Embedment Epoxy Anchors	TN-Anchor-3-4x9
17	2	3/8” Light Duty Thimbles	THIMLD-3/8
18	1	½” X 6” Turnbuckle Jaw to Jaw	TBJJ1/2X6
19	43	5/16” Snap Hooks	SNAPHK-5/16
20	1	Net Panel 2”, DPP41186, 8’6” X 53’, Black, Web	HW-NET-53FT
21	1	3/8” Galvanized Cable	HW-GAC
22	4	3/8” Wire Rope Clips	HDCLIP-3/8
23	3	Eyebolt Shoulder-1/2-13x8	9000989
25	15	Stake Pockets	2001868
26	24	Heavy Hex Nut – ¾-10 Plain	1013790
29	12	FW - 1/2	1011400
34	3	HX NT Flng - 1/2-13	1006562

Tools Needed

- Tape measure, marker, hammer drill, electrical tape, 3/4” socket, 1 1/8” socket, crescent wrenches, torque wrench, protective glasses, Hilti epoxy and gloves.
- Personal Protection Equipment, lifts and material handling equipment as required to complete the install safely.

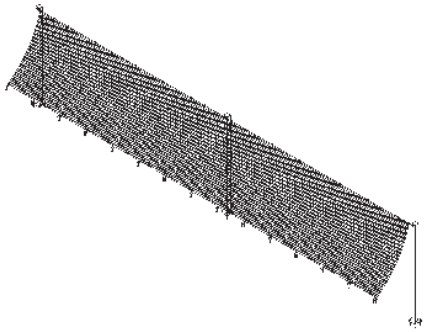

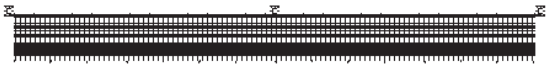

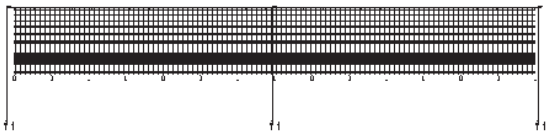

WARNING **Failure to read, understand, and follow the Installation Manual may result in injury or death.**

Installation of Classic Free Standing Truck Netting System - TN-BASE-FREE-53FT

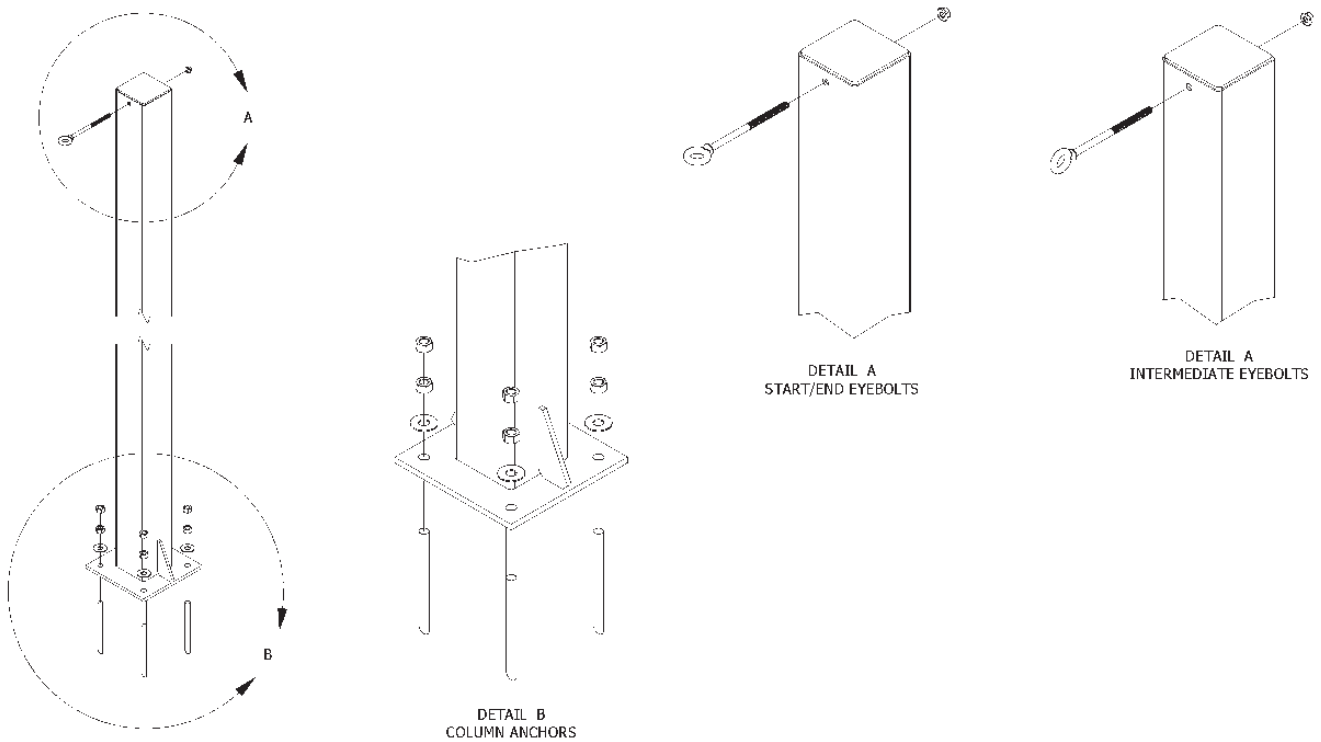

Installation of Columns

- **1.1** Installation of TN-BASE-FREE-53FT netting system begins with the installation of the columns. At 12 ft each column can weigh up to 250 lbs. To start, mark the column location on floor of where each column will need to be installed and mark the location of each anchor point (reference drawings provided for exact location).
- **1.2** Using a hammer drill install the 3/4” X 9” epoxy anchors with threaded rod, there will be 4 anchors per column. Install anchors to 4.5” embedment. See Hilti installation guide (https://shorturl.at/abxAU).
- **1.3** Once epoxy anchors are set, line up column with anchors and threaded rod. Lower the column down over the threaded rods. *All columns with 1/2” holes on the side will need to be facing the designated vehicle location.*
- **1.4** Once column is in place install one 3/4” flat washer at each threaded rod location.
- **1.5** After the flat washer is in place, thread two Hex nut 3/4-10 plain per threaded rod. Refer to Hilti installation guide for torque spec for nuts on epoxy anchors.
- **1.6** With the columns in place, install the 1/2” shoulder eyebolt. Near the top of each column you will find a 1/2” predrilled pass through hole. These holes must be facing towards the vehicle. Install 1/2” eyebolt through predrilled hole. Using 1/2-13 Hex nut, attach and thread the 1/2” eyebolt until tightened. *The eyebolt for each end column will need to be horizontal and the 1/2” eyebolt for the center will need to be installed vertically.*

WARNING **Failure to read, understand, and follow the Installation Manual may result in injury or death.**

Installation of Classic Free Standing Truck Netting System - TN-BASE-FREE-53FT

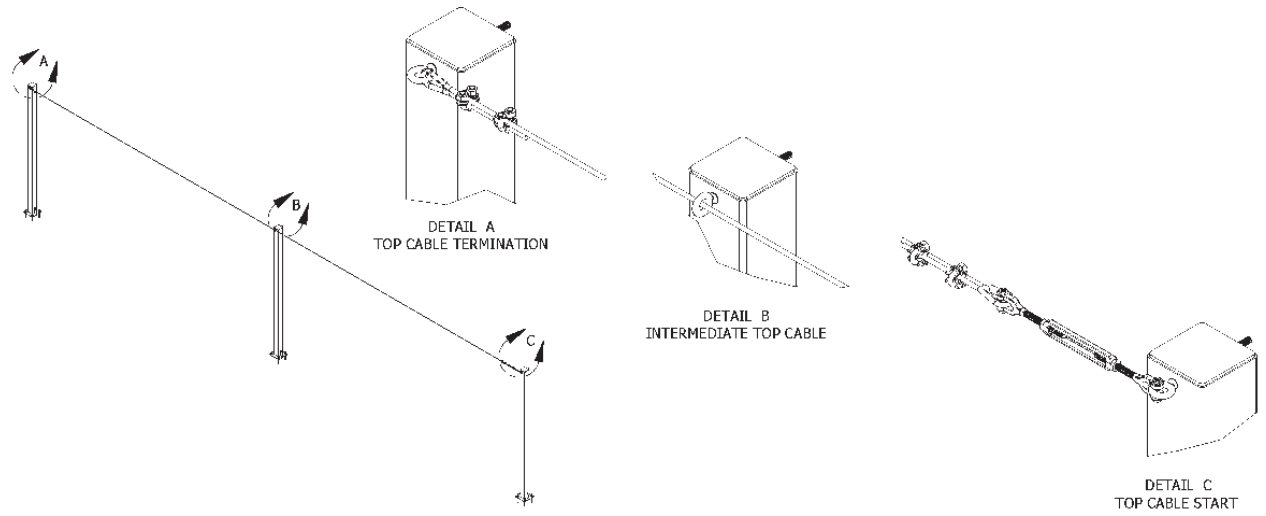

Installation of Cable

- **1.7** Open 1/2” X 6” turnbuckle until 1/2” of thread is showing on each side. This will give you the ability to tighten cable once installed.
- **1.8** Attach one end of 1/2” X 6” turnbuckle to one of the end columns 1/2” horizontal eye bolts.
- **1.9** Attach one 3/8” light duty thimble to other end of 1/2” X 6” turnbuckle.
- **1.10** Wrap 3/8” galvanized cable around 3/8” light duty thimble. Turn back 6-1/2” of 3/8” cable from thimble. Put first clip on one saddle width from “dead end”. Position U-bolt portion of clip over the dead end (cut end portion of rope). Saddle of wire clip has to be against the live end (load carrying part of the rope). See page 35 for diagram. Torque nuts to 45 ft-lbs.
- **1.11** Put second clip close to thimble without binding it. Install nuts firmly but do not yet tighten to proper torque.
- **1.12** Apply light tension to wire rope assembly at 4” apart and then tighten all nuts evenly to proper torque.
- **1.13** Run 3/8” cable through vertical eyebolt installed on center column.
- **1.14** On other end column install 3/8” light duty thimble around horizontal 1/2” eyebolt already installed.
- **1.15** Wrap 3/8” galvanized cable around 3/8” light duty thimble. Turn back 6-1/2” of 3/8” cable from thimble. Put first clip on one saddle width from “dead end”. Position U-bolt portion of clip over the dead end (cut end portion of rope). Saddle of wire clip has to be against the live end (load carrying part of the rope). See page 35 for diagram. Torque nuts to 45 ft-lbs.
- **1.16** Using electrical tape wrap overhang of cable at 6-1/2” and cut of remaining cable at the electrical tape mark.
- **1.17** Take up the cable tension by turning the turnbuckle. Do not allow the cable to twist while the turnbuckle is being tightened. DO NOT over tighten the turnbuckle.
- **1.18** Inspect wire rope clip nuts before and after install. In the event of a product falling into the net system, reinspect the wire rope clips and retorque as needed. When loads are applied, the wire rope stretches slightly, so the clips and turnbuckles may need to be re-torqued.

WARNING **Failure to read, understand, and follow the Installation Manual may result in injury or death.**

Installation of Classic Free Standing Truck Netting System - TN-BASE-FREE-53FT

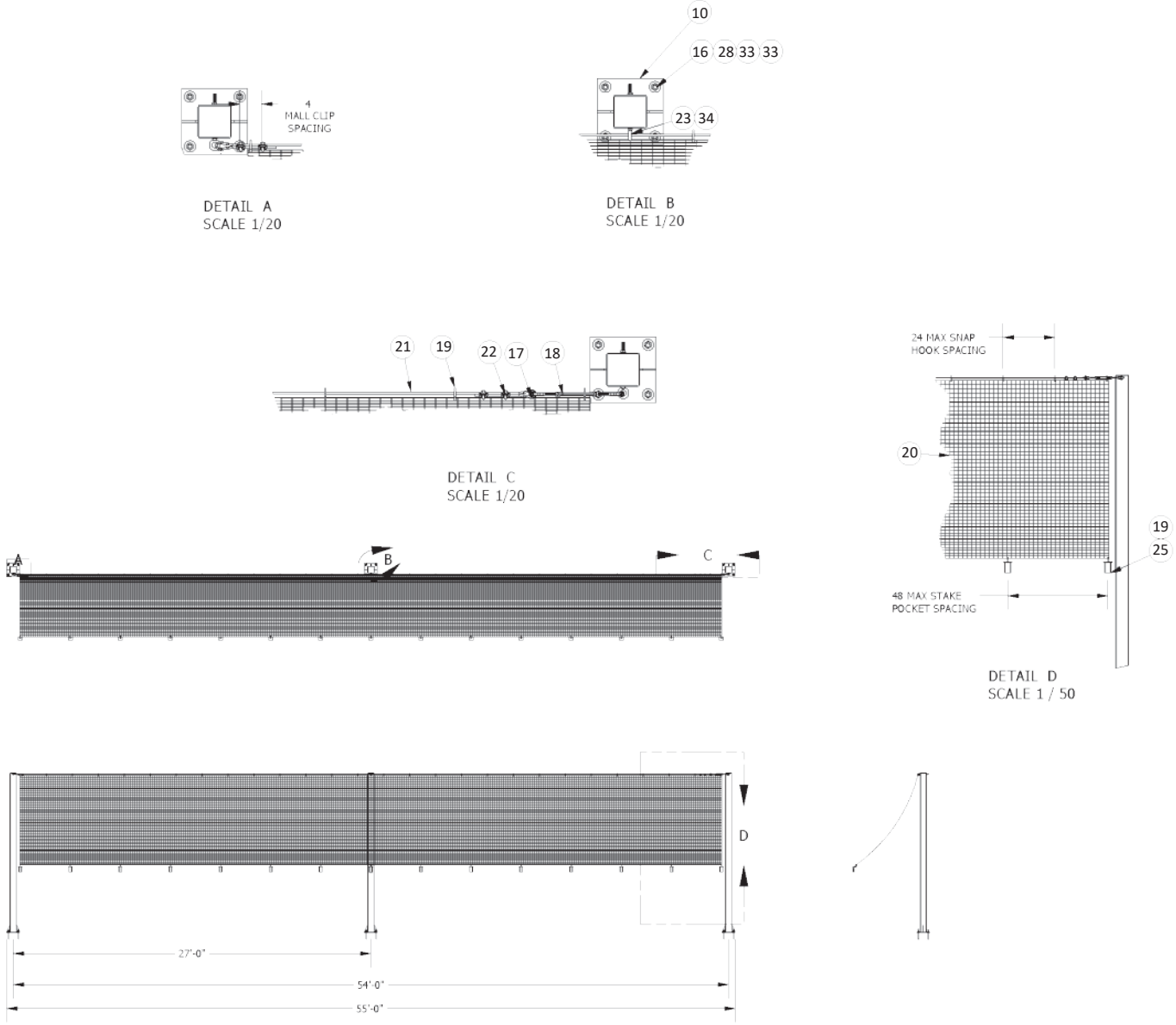

Installation of Netting

- **1.19** Lay netting panel flat on the ground.
- **1.20** Install 5/16” snap hooks at each of the four corners on the webbing of the netting panel and every 2 ft on long sides of net panel. NO snap hooks needed on short sides and DO NOT attach snap hooks directly to net, only on border.
- **1.21** Using 5/16” snap hooks attached netting panel to 3/8” galvanized cable every 2 ft.
- **1.22** While the netting panel is hanging from the 3/8” cable towards the floor, attach stake pockets every 4 ft to the 5/16” snap hooks.

Netting Specifications	
Part#	DPP41186
Material	HTPP - High Tenacity Polypropylene
Style	Raschel Knotless Netting
Mesh Size	4" Square Mesh
Flame Retardant Test	NFPA701
UV Treatment	UV Stabilized
Color	Black
Border	Polypropylene Black Webbing

WARNING **Failure to read, understand, and follow the Installation Manual may result in injury or death.**

Installation of Pivoting Free Standing Truck Netting System - TN-PIVOT-FREE-53FT

Hardware Included			
Item#	**Quantity**	**Description**	**Part#**
2	2	Pivot Tube 24 ft	TN-PIVOTTUBE-24
3	1	Pivot Tube 7 ft	TN-PIVOTTUBE-7
5	3	Truck Net Pivot Bracket Subassembly	TN-PIVOT-BRK-SUB
6	3	Truck Net Pivot Arm Subassembly	TN-PIVOT-ARM-SUB
7	3	Truck Net Pivot Column Freestanding	TN-PIVCOL-FREE
16	12	Anchor - 3/4-10x9"	TN-ANCHOR-3-4X9
17	2	3/8” Light Duty Thimbles	THIMLD-3/8
18	1	½” X 6” Turnbuckle Jaw to Jaw	TBJJ1/2X6
19	56	5/16” Snap Hooks	SNAPHK-5/16
20	1	Net Panel 2", DPP41186, 8'6" X 53', Black, Web	HW-NET-53FTx102IN
21	1	3/8” Galvanized Cable - 56ft	HW-GAC
22	4	3/8” Wire Rope Clips	HDCLIP-3/8
23	3	Eyebolt Shoulder-1/2-13x8	9000989
28	12	FW - 3/4	1011414
30	12	FW - 1/2	1006807
32	6	HX NT- 1/2-13	1006633
33	24	HX NT - 3/4-10	1006585
34	3	HX NT Flng - 1/2-13	1006562
36	3	HHCS 1/2-13 x 6.5	1005888
37	3	HHCS 1/2-13 x 6.5	1005886

Tools Needed

- Tape measure, marker, hammer drill, electrical tape, 9/16” socket, 1 1/8” socket, crescent wrenches, torque wrench, 3/8” cable cutters, protective glasses, 5/16 allen key, Hilti epoxy and gloves.
- Personal Protection Equipment, lifts and material handling equipment as required to complete the install safely.

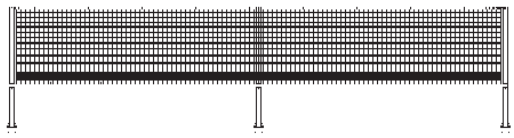

WARNING **Failure to read, understand, and follow the Installation Manual may result in injury or death.**

Installation of Pivoting Free Standing Truck Netting System - TN-PIVOT-FREE-53FT

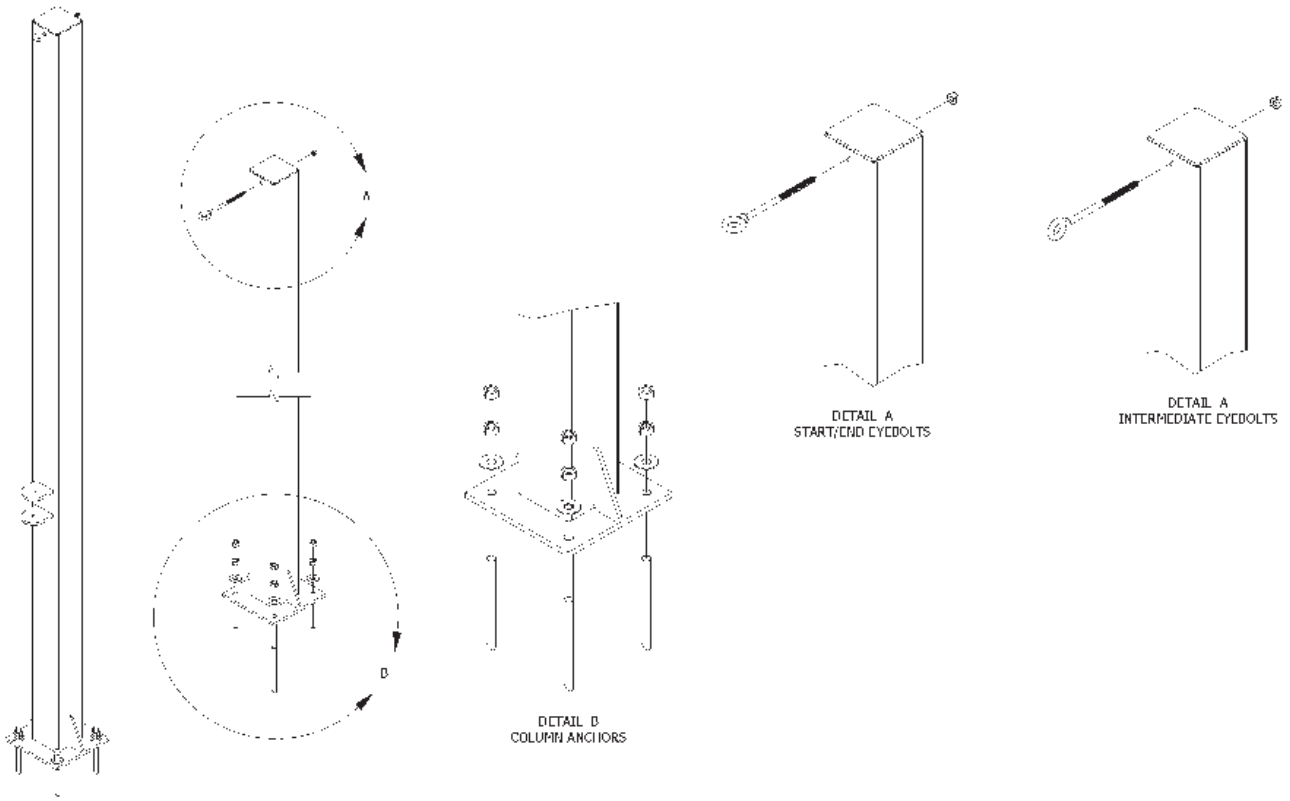

Installation of Columns

- **1.1** Installation of TN-PIVOT-FREE-53FT netting system begins with the installation of the columns. At 12 ft each column can weigh up to 250lbs. To begin mark the column location on floor of where each column will need to be installed and mark the location of each anchor point (reference drawings provided for exact location).
- **1.2** Using a hammer drill install the 3/4” X 9” epoxy anchors with threaded rod, there will be 4 anchors per column. Install anchors to 4.5” embedment. See Hilti installation guide.
- **1.3** Once epoxy anchors are set, line up column with anchors and threaded rod and lower the column down over the threaded rods. On all columns the pivot arm bracket will need to be facing the designated vehicle location.
- **1.4** Once column is in place install one 3/4” flat washer at each threaded rod location.
- **1.5** Once flat washer is installed, thread two Hex nut 3/4-10 plain per threaded rod (100 ft-lb). Refer to Hilti installation guide for torque spec for nuts on epoxy anchors.
- **1.6** With columns in place, install the 1/2” shoulder eyebolt. Towards the top of each column locate a ½” predrilled pass through hole. These holes must be facing towards the vehicle. Install 1/2” eyebolt through predrilled hole. Using a 3/4” socket wrench thread 1/2-13 Hex nut. Attach and thread 1/2” eyebolt until tightened. The eyebolt for each end column will need to be horizontal and the 1/2” eyebolt for the center will need to be installed vertically.

WARNING **Failure to read, understand, and follow the Installation Manual may result in injury or death.**

Installation of Pivoting Free Standing Truck Netting System - TN-PIVOT-FREE-53FT

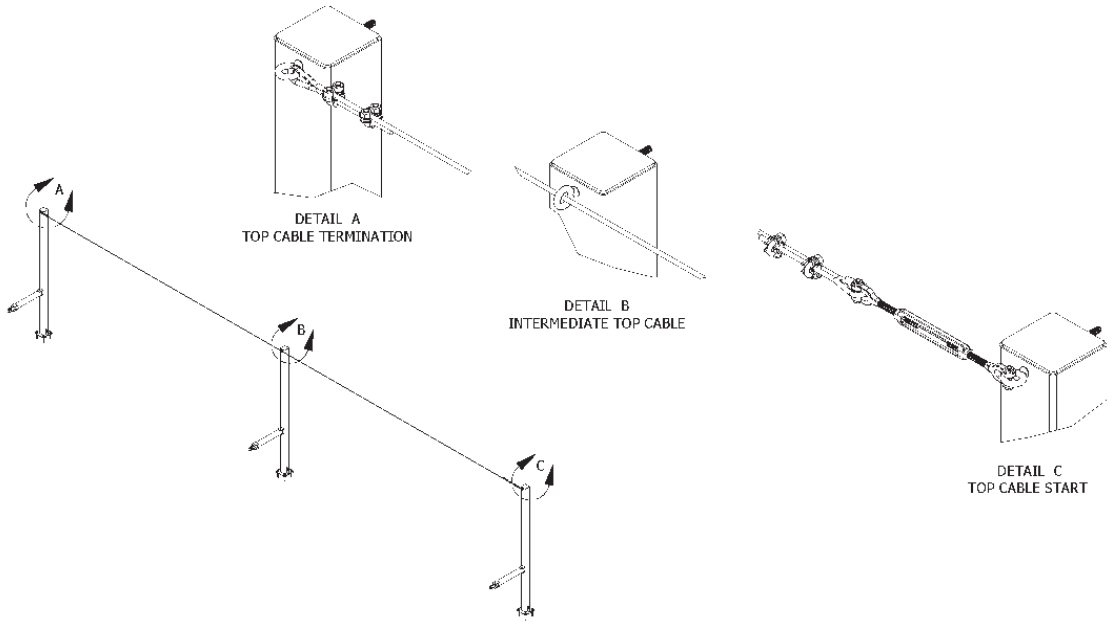

Installation of Cable

- **1.7** Start cable installation with 3/8” cable, open 1/2” X 6” turnbuckle until 1/2” of thread is showing on each side. This will give you the ability to tighten cable once installed.
- **1.8** Attach one end of 1/2” X 6” turnbuckle to one of the end columns 1/2” horizontal eye bolts.
- **1.9** Attach one 3/8” light duty thimble to other end of 1/2” X 6” turnbuckle.
- **1.10** Wrap 3/8” galvanized cable around 3/8” light duty thimble. Turn back 6-1/2” of 3/8” cable from thimble. Put first clip on one saddle width from “dead end”. Position U-bolt portion of clip over the dead end (cut end portion of rope). Saddle of wire clip is to be against the live end (load carrying part of the rope). See page 35 for diagram. Torque nuts to 45 ft-lbs.
- **1.11** Put second clip close to thimble without binding it. Install nuts firmly but do not yet tighten to proper torque.
- **1.12** Apply light tension to wire rope assembly and tighten all nuts evenly to proper torque.
- **1.13** Run 3/8” cable through vertical eyebolt installed on center column.
- **1.14** On other end of column install 3/8” light duty thimble around horizontal 1/2” eyebolt already installed.
- **1.15** Wrap 3/8” galvanized cable around 3/8” light duty thimble. Turn back 6-1/2” of 3/8” cable from thimble. Put first clip on one saddle width from “dead end”. Position U-bolt portion of clip over the dead end (cut end portion of rope). Saddle of wire clip is to be against the live end (load carrying part of the rope). See page 35 for diagram. Torque nuts to 45 ft-lbs.
- **1.16** Using electrical tape wrap overhang of cable at 6-1/2” and cut of remaining cable at the electrical tape mark.
- **1.17** Take up the cable tension by turning the turnbuckle. Do not allow the cable to twist while the turnbuckle is being tightened. DO NOT over tighten the turnbuckle.
- **1.18** Inspect wire rope clip nuts before and after install. In the event of a product falling into the net system, reinspect the wire rope clips and re-torque as needed. When loads are applied, the wire rope stretches slightly, the clips and turnbuckles may need to be retorqued.

WARNING **Failure to read, understand, and follow the Installation Manual may result in injury or death.**

Installation of Pivoting Free Standing Truck Netting System - TN-PIVOT-FREE-53FT

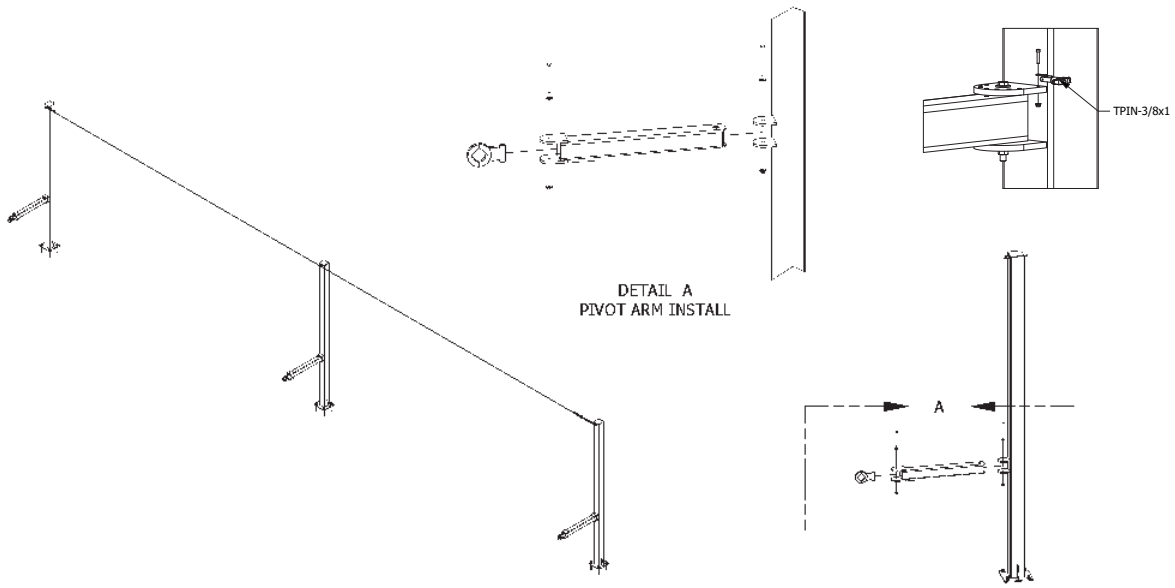

Installation of Pivot Arm

- **1.19** Once 3/8” cable has been installed. Next install the truck net pivot arm subassembly. The arm will connect to the lower bracket of column. The pivot arm will slide between the bracket. Using the 1/2”-13X 6.5 bolt, slide the bolt through the hole in the bracket and lining up with the hole on the pivot arm. Underneath the bracket, use a 1/2” flat washer and 1/2”-13 Hex nut. You will use a 3/4” socket and a crescent wrench to tighten the bolt. You will repeat this step for all three pivot arms.
- **1.20** Install pivot rotation pin TPIN-3/8x1 (1 provided per system) in your preferred column, install using #10-32 socket headed cap screw and #10-32 flange nut.
- **1.21** After each pivot arm has been installed, you will need to install the truck net pivot bracket assembly to the end of each pivot arm. These brackets are used to hold the compression bar in place. Using the 1/2”-13 X 6 bolt you will slide the bolt through the hole in the bracket and lining up with the hole on the pivot arm. Underneath the bracket assembly you will install a 1/2” flat washer and 1/2”-13 Hex nut using a 3/4” socket and a crescent wrench to tighten the bolt. You will repeat this step for all three pivot arms. Next step will be installing the net panel to the 3/8” cable.

WARNING **Failure to read, understand, and follow the Installation Manual may result in injury or death.**

Installation of Pivoting Free Standing Truck Netting System - TN-PIVOT-FREE-53FT

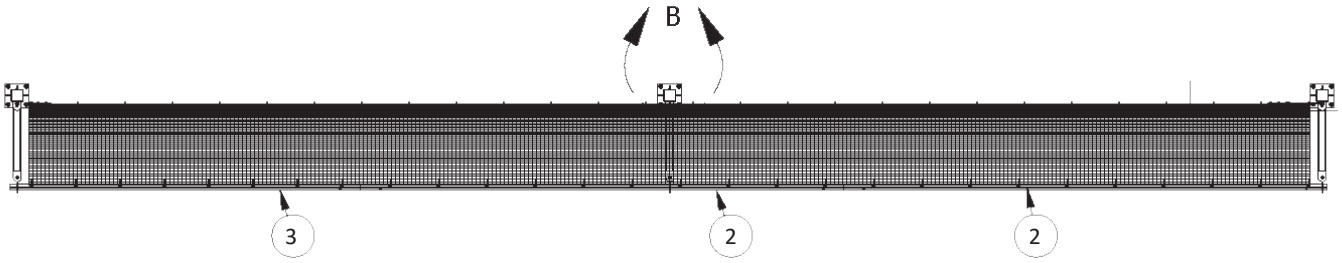

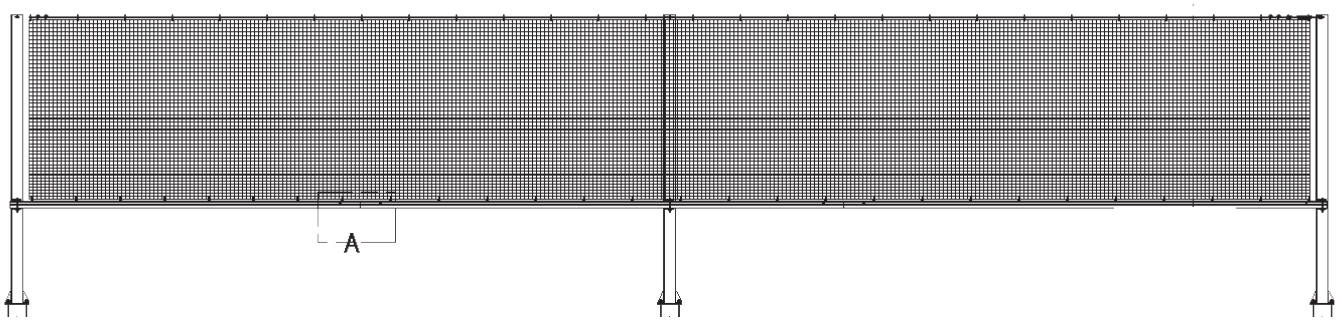

Installation of Netting

- **1.22** Lay netting panel flat on the ground.
- **1.23** Install 5/16” snap hooks at each of the four corners on the webbing of the netting panel and then every 2 ft on long sides of net panel. NO snap hooks needed on short sides and do not attach snap hooks directly to net, only on border.
- **1.24** Using 5/16” snap hooks attached netting panel to 3/8” galvanized cable every 2 ft. Allow the net panel to hang loose towards the ground. Next install the compression bar.

Netting Specifications	
Part#	DPP41186
Material	HTPP - High Tenacity Polypropylene
Style	Raschel Knotless Netting
Mesh Size	4" Square Mesh
Flame Retardant Test	NFPA701
UV Treatment	UV Stabilized
Color	Black
Border	Polypropylene Black Webbing

WARNING **Failure to read, understand, and follow the Installation Manual may result in injury or death.**

Installation of Pivoting Free Standing Truck Netting System - TN-PIVOT-FREE-53FT

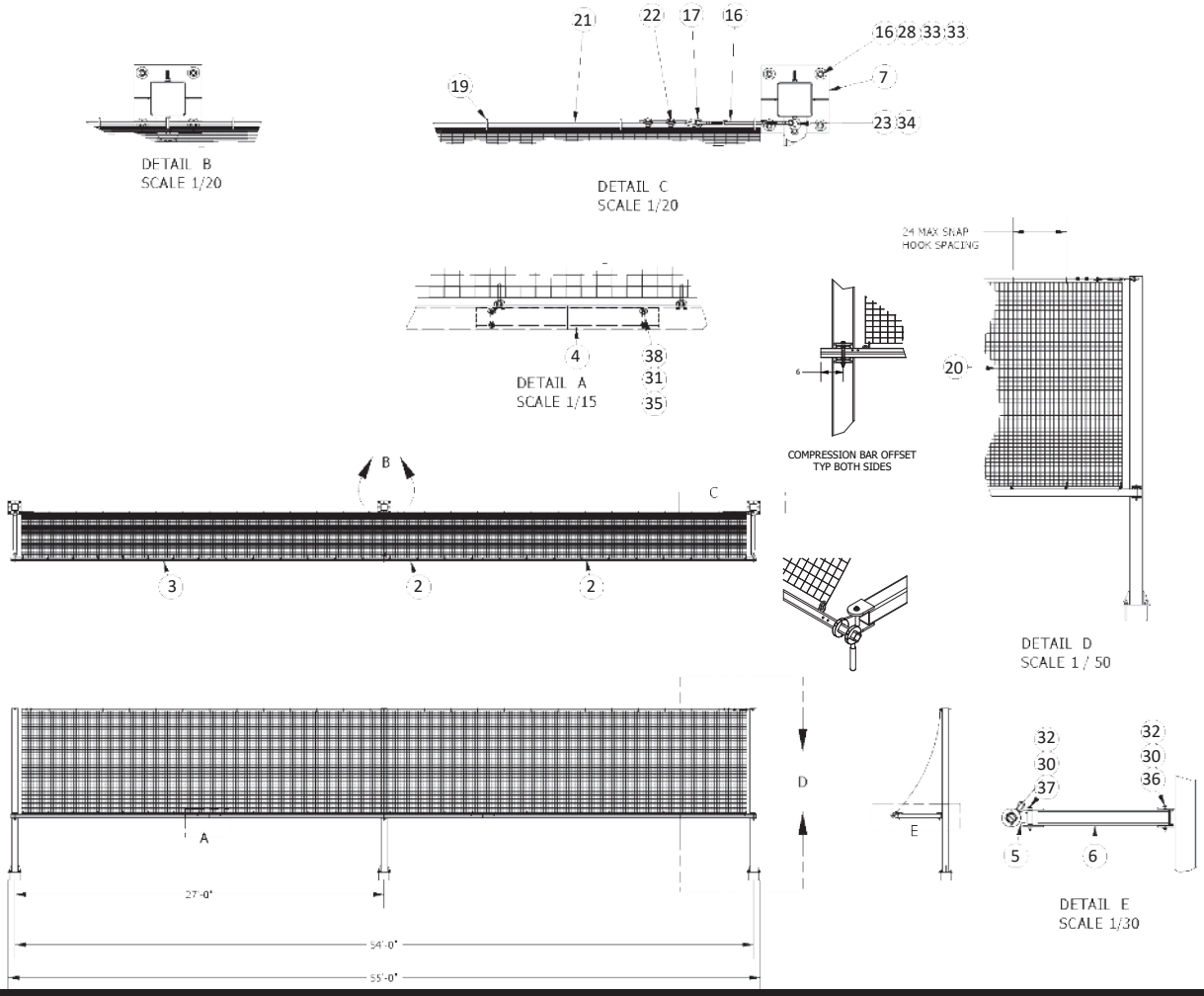

Installation of Compression Bar & Netting

- **1.25** The compression bar consists of three tubes with welded eyes and two splice tubes to connect them. Lay all three pieces of compression bars on the ground. Insert the splice tube into an open end of pivot tube (7 ft) and attach with 3/8 Hex bolt, 3/8 washer & 3/8 Hex flange nut. Assemble Pivot tube (24 ft) to the other end of the splice making sure that the welded eyes are in line. Repeat to attach the last Pivot tube (24 ft) to the other end of the assembled Pivot tube (24 ft) with the last splice tubes. Make sure all welded eyes are in line.
- **1.26** Three people are needed to attach the compression bar to the pivot arms. The arms will all need to be engaged (opened up all the way). Start by using the allen key to remove one side of the two-part shaft collar of the pivot arm bracket. Two bolts per collar, top and bottom.
- **1.27** Once the collars have been removed, two people will hold the compression bar against the pivot arm bracket collar. A third person will reinstall the shaft collar wrapping around the compression bar using the allen key. Before tightening the allen screws all the way, make sure the welded eyes on the compression bar are aligned facing upwards.
- **1.28** Install the pivot handle in a convenient location, clamp onto pivot bar using a 5/16 allan key.
- **1.29** After the compression bar has been installed, attach the net to the compression bar approximately every 2 ft using the 5/16” snap hooks.
- **1.30** Test the system by opening and closing the swinging arms.

WARNING **Failure to read, understand, and follow the Installation Manual may result in injury or death.**

Installation of Fixed Base Portable Truck Netting System - TN-BASE-PORT-53FT

Hardware Included			
Item#	**Quantity**	**Description**	**Part#**
1	3	Truck Net Portable Base	TN-PORT-BASE
10	3	Truck Net Column	TN-COL-BASE-12FT
17	2	3/8” Light Duty Thimbles	THIMLD-3/8
18	1	½” X 6” Turnbuckle Jaw to Jaw	TBJJ1/2X6
19	43	5/16” Snap Hooks	SNAPHK-5/16
20	1	Net Panel 2”, DPP41186, 8’6” X 53’, Black, Web	HW-NET-53FT
21	1	3/8” Galvanized Cable	HW-GAC
22	4	3/8” Wire Rope Clips	HDCLIP-3/8
23	3	Eyebolt Shoulder-1/2-13x8	9000989
25	15	Stake Pockets	2001868
28	12	FW - 3/4	1011414
33	24	HX NT - 3/4-10	1006585
32	3	HX NT Flng - 1/2-13	1006562

Tools Needed

- Tape measure, marker, electrical tape, 3/4” socket wrench, 1 1/18” socket, crescent wrenches, torque wrench, protective glasses and gloves.
- Personal Protection Equipment, lifts and material handling equipment as required to complete the install safely.

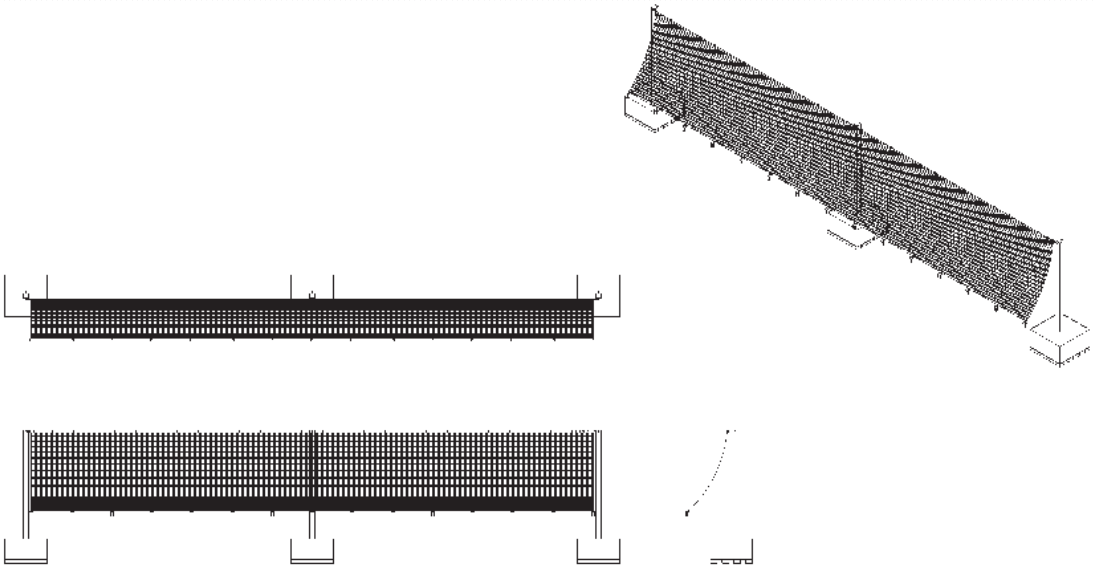

WARNING **Failure to read, understand, and follow the Installation Manual may result in injury or death.**

Installation of Fixed Base Portable Truck Netting System - TN-BASE-PORT-53FT

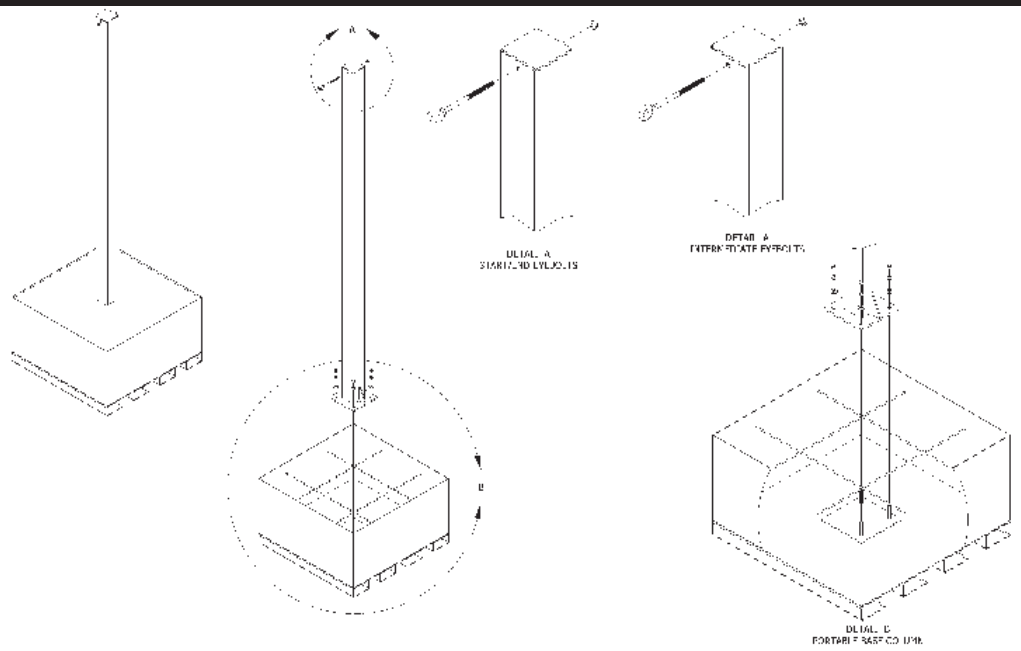

Installation of Columns and Bases

- **1.1** To install columns on portable bases, the columns will need to be lifted up and lowered down over the four pieces of threaded rod already installed on the portable bases.
- **1.2** Once the column is in place, install one 3/4” flat washer at each threaded rod location.
- **1.3** After flat washer is in place, thread one Hex nut 3/4-10” snug tight on each threaded rod.
- **1.4** Fill the portable bases with quick cement. A MIN 2500 PSI concrete is needed to achieve the total weight of at least 4,200 lbs. Concrete must cover upper rebar by at least 2”. Allow concrete to dry. Once concrete is set, bases will need to be moved by forklift.
- **1.5** Refer to drawing provided to establish the appropriate distance to be measured between the bases.
- **1.6** Make sure all columns are in a straight line with 1/2” drilled hole facing truck designated area. With columns in place, install the 1/2” shoulder eyebolt. Near the top of each column, locate the 1/2” predrilled pass through hole. These holes must be facing the vehicle. Install 1/2” eyebolt through predrilled hole. Using 1/2-13 Hex nut, attach and thread 1/2” eyebolt until tightened. The eyebolt for each end column will need to be horizontal and the 1/2” eyebolt for the center will need to be installed vertically.

WARNING **Failure to read, understand, and follow the Installation Manual may result in injury or death.**

Installation of Fixed Base Portable Truck Netting System - TN-BASE-PORT-53FT

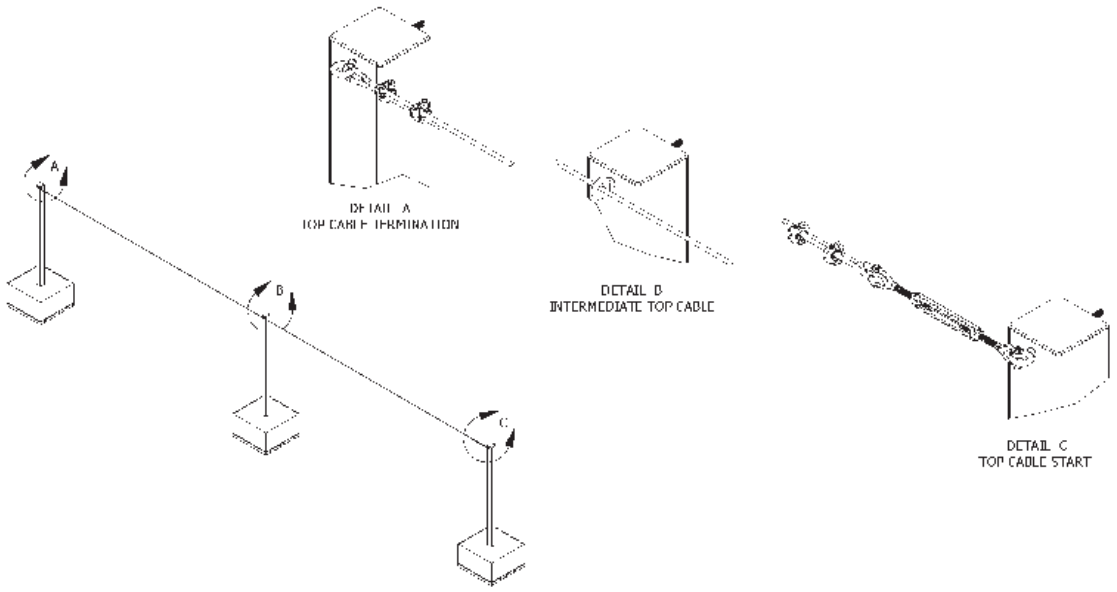

Installation of Cable

- **1.6** Open the 1/2” X 6” turnbuckle until 1/2” of thread is showing on each side. This will allow the installer to tighten the cable once installed.
- **1.7** Attach one end of 1/2” X 6” turnbuckle to one of the end columns 1/2” horizontal eye bolts.
- **1.8** Attach one 3/8” light duty thimble to other end of 1/2” X 6” turnbuckle.
- **1.9** Wrap 3/8” galvanized cable around 3/8” light duty thimble. Turn back 6-1/2” of 3/8” cable from thimble. Put first clip on one saddle width from “dead end”. Position U-bolt portion of clip over the dead end (cut end portion of rope). Saddle of wire clip is to be against the live end (load carrying part of the rope). See page 35 for diagram. Torque nuts to 45 ft-lbs.
- **1.10** Put second clip close to thimble without binding it. Install nuts firmly but do not yet tighten to proper torque.
- **1.11** Apply light tension to wire rope assembly and tighten all nuts evenly to proper torque.
- **1.12** Run 3/8” cable through vertical eyebolt installed on center column.
- **1.13** On the other end of the column, install 3/8” light duty thimble around horizontal 1/2” eyebolt already installed.
- **1.14** Wrap 3/8” galvanized cable around 3/8” light duty thimble. Turn back 6-1/2” of 3/8” cable from thimble. Put first clip on one saddle width from “dead end”. Position U-bolt portion of clip over the dead end (cut end portion of rope). Saddle of wire clip is to be against the live end (load carrying part of the rope). See page 35 for diagram. Torque nuts to 45 ft-lbs.
- **1.15** Using electrical tape, wrap overhang of cable at 6-1/2” and cut of remaining cable at the electrical tape mark.
- **1.16** Take up the cable tension by turning the turnbuckle. DO NOT allow the cable to twist while the turnbuckle is being tightened. DO NOT over tighten the turnbuckle.
- **1.17** Inspect wire rope clip nuts before and after install. In the event of a product falling into the net system, reinspect the wire rope clips and re-torque as needed. When loads are applied, the wire rope stretches slightly, so the clips and turnbuckles may need to be retorqued.

WARNING **Failure to read, understand, and follow the Installation Manual may result in injury or death.**

Installation of Fixed Base Portable Truck Netting System - TN-BASE-PORT-53FT

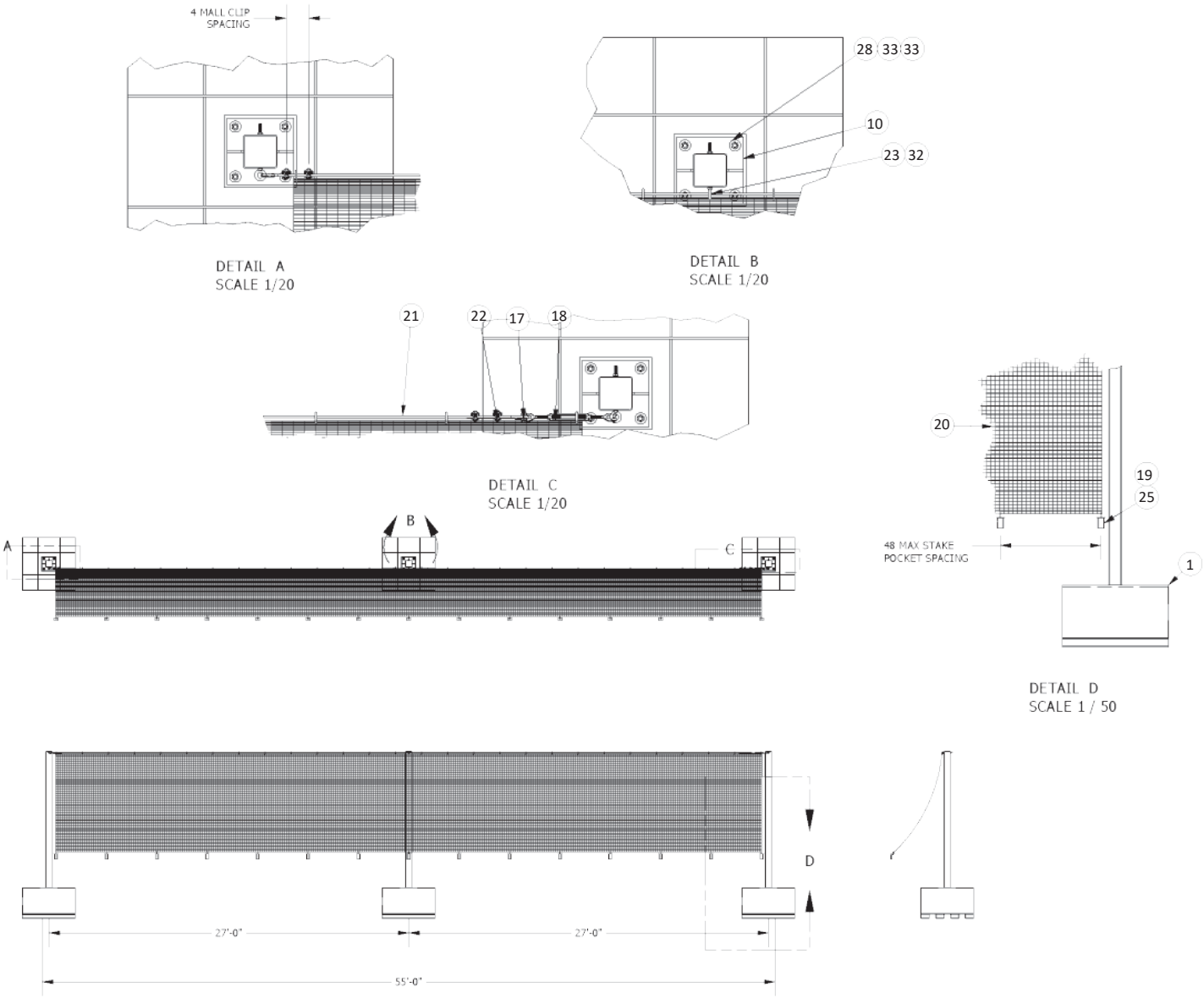

Installation of Netting

- **1.18** Lay netting panel flat on the ground.
- **1.19** Install 5/16” snap hooks at each of the four corners on the webbing of the netting panel and every 2 ft on long sides of net panel. NO snap hooks are needed on short sides. DO NOT attach snap hooks directly to net only on border.
- **1.20** Using 5/16” snap hooks attached netting panel to 3/8” galvanized cable at approximately every 2 ft.
- **1.21** While the netting panel is hanging from the 3/8” cable towards the floor, attach stake pockets to the 5/16” snap hooks that are closest to the floor at approximately every 4 ft.
- To relocate the base portable system, please follow installation directions in reverse, starting with removing the net and disconnecting the 3/8” cable. Once the netting and cable are disconnected, the portable bases can be moved with the columns attached.

WARNING **Failure to read, understand, and follow the Installation Manual may result in injury or death.**

Installation of Pivoting Portable Truck Netting System - TN-PIVOT-PORT-53FT

Hardware Included			
Item#	**Quantity**	**Description**	**Part#**
1	3	Truck Net Portable Base	TN-PORT-BASE
2	2	Pivot Tube 24 ft	TN-PIVOTTUBE-24
3	1	Pivot Tube 7 ft	TN-PIVOTTUBE-7
5	3	Truck Net Pivot Bracket Subassembly	TN-PIVOT-BRK-SUB
6	3	Truck Net Pivot Arm Subassembly	TN-PIVOT-ARM-SUB
7	3	Truck Net Pivot Column Freestanding	TN-PIVCOL-FREE
17	2	3/8” Light Duty Thimbles	THIMLD-3/8
18	1	½” X 6” Turnbuckle Jaw to Jaw	TBJJ1/2X6
19	56	5/16” Snap Hooks	SNAPHK-5/16
20	1	Net Panel 2", DPP41186, 8'6" X 53', Black, Web	HW-NET-53FTx102IN
21	1	3/8” Galvanized Cable 56 ft	HW-GAC
22	4	3/8” Wire Rope Clips	HDCLIP-3/8
23	3	Eyebolt Shoulder-1/3-13x8	9000989
28	12	FW - 3/4	1011414
30	12	FW - 1/2	1006807
32	6	HX NT- 1/2-13	1006633
33	24	HX NT - 3/4-10	1006585
34	3	HX NT Flng - 1/2-13	1006562
36	3	HHCS 1/2-13 x 6.5	1005888
37	3	HHCS 1/2-13 x 6	1005886

Tools Needed

- Tape measure, marker, electrical tape, 3/4” socket wrench, 1 1/8” socket, crescent wrenches, torque wrench, 5/16 allen key, protective glasses and gloves.
- Personal Protection Equipment, lifts and material handling equipment as required to complete the install safely.

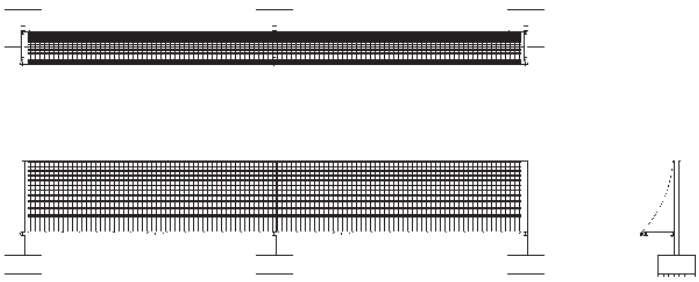

WARNING **Failure to read, understand, and follow the Installation Manual may result in injury or death.**

Installation of Pivoting Portable Truck Netting System - TN-PIVOT-PORT-53FT

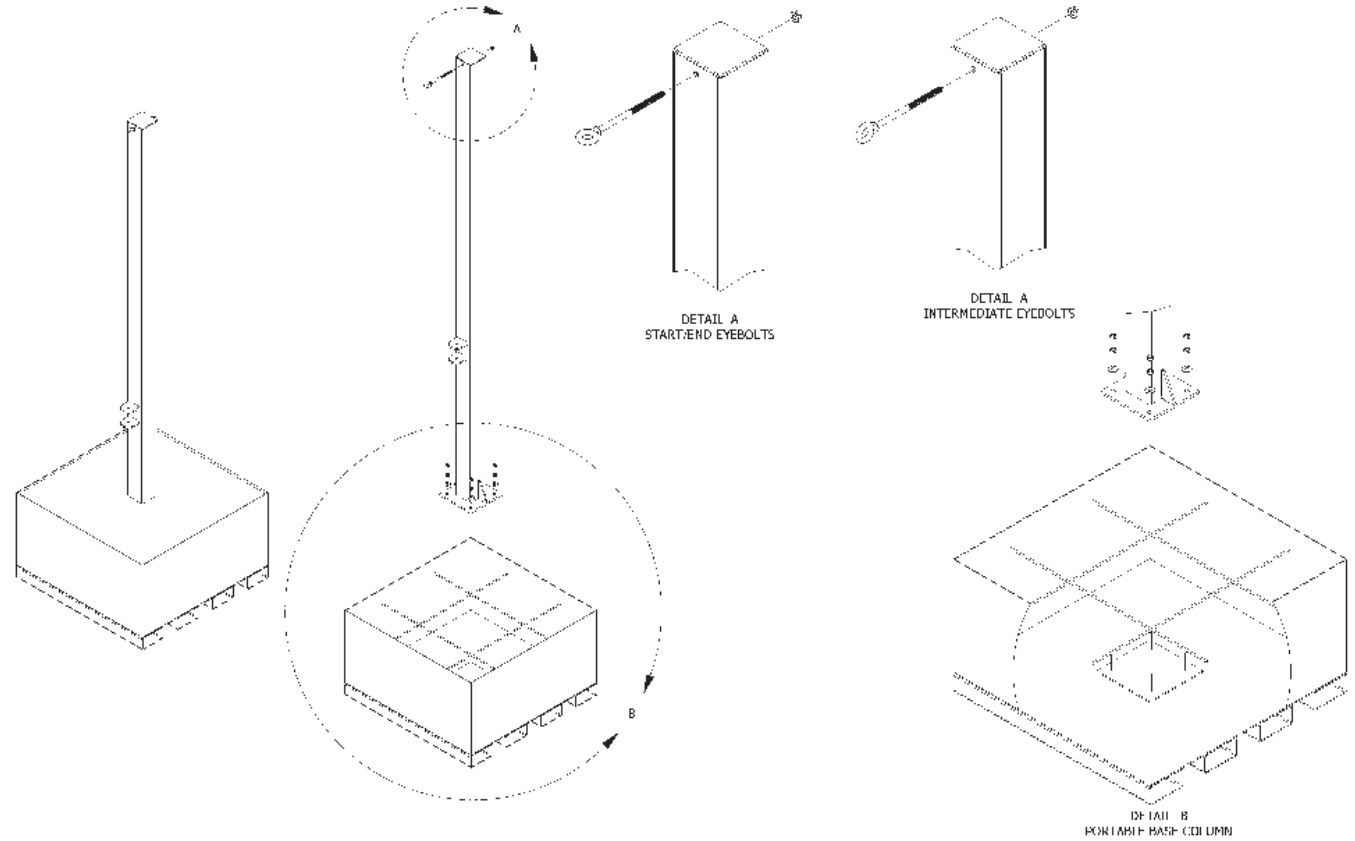

Installation of Columns and Bases

- **1.1** To install columns on portable bases, the columns will need to be lifted up and lowered down over the four pieces of threaded rod already installed on the portable bases.
- **1.2** Once column is in place install one 3/4” flat washer at each threaded rod location.
- **1.3** After flat washer is threaded place two Hex nut 3/4-10” on each threaded rod.
- **1.4** Next fill the portable bases with quick cement. A MIN 2500 PSI concrete is needed to achieve the total weight of at least 4,200 lbs. Concrete must cover upper rebar by at least 2”. Allow to concrete to dry. Once concrete is set, bases will need to be moved by a forklift.
- **1.5** Refer to drawing provided to establish the appropriate distance to be measured between the bases.
- **1.6** Make sure all columns are in a straight line with 1/2” drilled hole facing truck designated area. With columns in place, install the 1/2” shoulder eyebolt next. Near the top of each column, locate the 1/2” predrilled pass through hole. These holes must be facing towards the vehicle. Install 1/2” eyebolt through predrilled hole. Using 1/2-13 Hex nut, attach and thread 1/2” eyebolt until tightened. The eyebolt for each end column will need to be horizontal and the 1/2” eyebolt for the center will need to be installed vertically.

WARNING **Failure to read, understand, and follow the Installation Manual may result in injury or death.**

Installation of Pivoting Portable Truck Netting System - TN-PIVOT-PORT-53FT

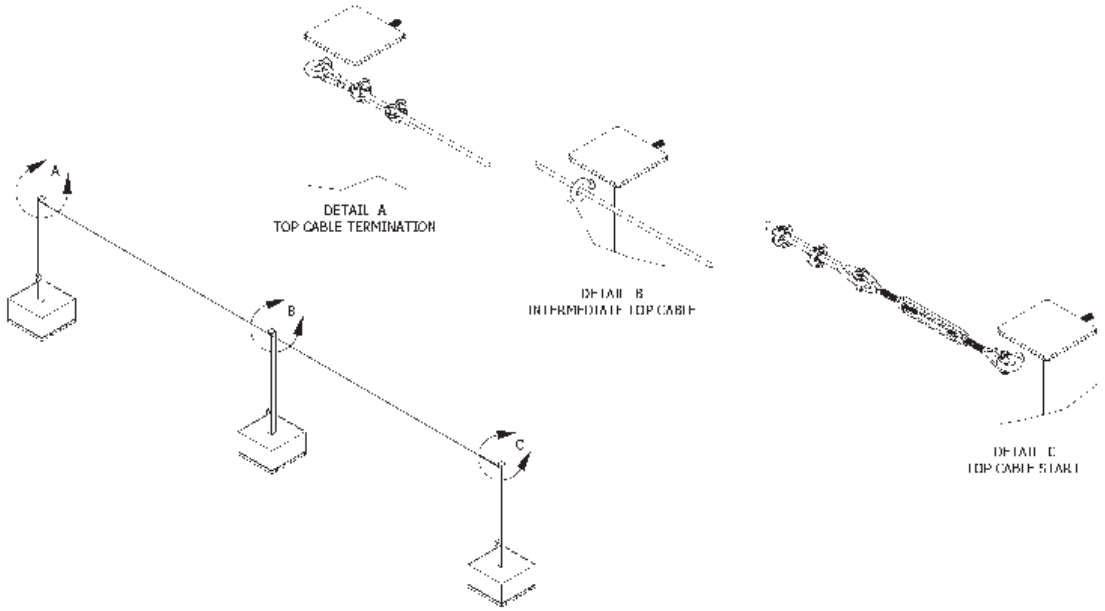

Installation of Cable

- **1.7** Open the 1/2” X 6” turnbuckle until 1/2” of thread is showing on each side. This will allow the installer to tighten the cable once installed.
- **1.8** Attach one end of 1/2” X 6” turnbuckle to one of the end columns 1/2” horizontal eye bolts.
- **1.9** Attach one 3/8” light duty thimble to other end of 1/2” X 6” turnbuckle.
- **1.10** Wrap 3/8” galvanized cable around 3/8” light duty thimble. Turn back 6-1/2” of 3/8” cable from thimble. Put first clip on one saddle width from “dead end”. Position U-bolt portion of clip over the dead end (cut end portion of rope). Saddle of wire clip is to be against the live end (load carrying part of the rope). See page 35 for diagram. Torque nuts to 45 ft-lbs.
- **1.11** Put second clip close to thimble without binding it. Install nuts firmly but do not yet tighten to proper torque.
- **1.12** Apply light tension to wire rope assembly and tighten all nuts evenly to proper torque.
- **1.13** Run 3/8” cable through vertical eyebolt installed on center column.
- **1.14** On the other end of the column, install 3/8” light duty thimble around horizontal 1/2” eyebolt already installed.
- **1.15** Wrap 3/8” galvanized cable around 3/8” light duty thimble. Turn back 6-1/2” of 3/8” cable from thimble. Put first clip on one saddle width from “dead end”. Position U-bolt portion of clip over the dead end (cut end portion of rope). Saddle of wire clip is to be against the live end (load carrying part of the rope). See page 35 for diagram. Torque nuts to 45 ft-lbs.
- **1.16** Using electrical tape, wrap overhang of cable at 6-1/2” and cut of remaining cable at the electrical tape mark.
- **1.17** Take up the cable tension by turning the turnbuckle. DO NOT allow the cable to twist while the turnbuckle is being tightened. DO NOT over tighten the turnbuckle.
- **1.18** Inspect wire rope clip nuts before and after install. In the event of a product falling into the net system, reinspect the wire rope clips and re-torque as needed. When loads are applied, the wire rope stretches slightly, so the clips and turnbuckles may need to be retorqued.

WARNING **Failure to read, understand, and follow the Installation Manual may result in injury or death.**

Installation of Pivoting Portable Truck Netting System - TN-PIVOT-PORT-53FT

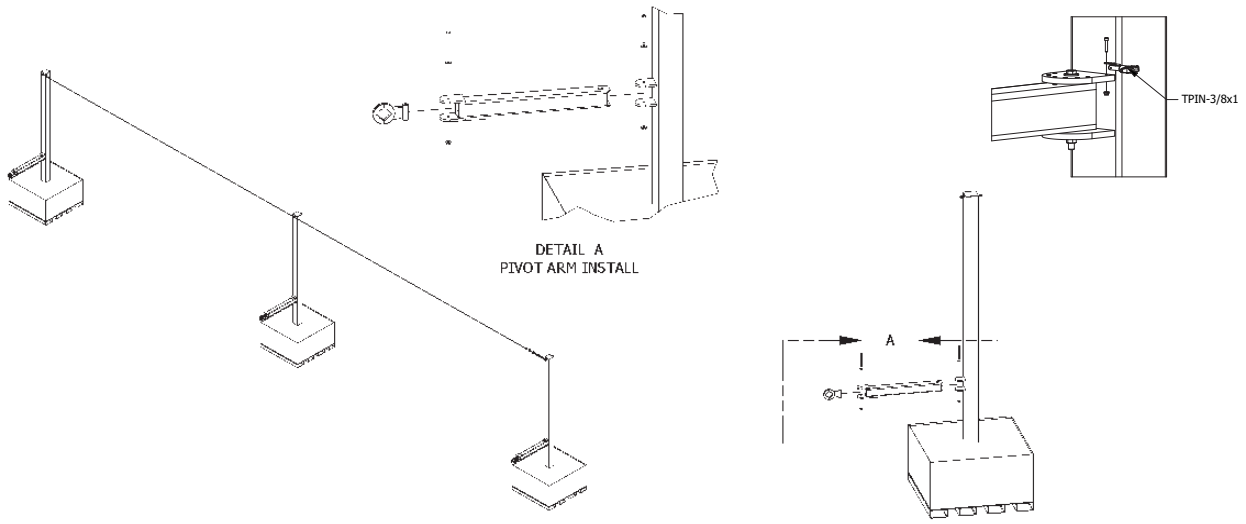

Installation of Pivot Arm

- **1.19** Once 3/8” cable has been installed, install the truck net pivot arm subassembly. The arm will connect to the lower bracket of column. The pivot arm will slide between the bracket. Using the 1/2”-13X 6.5 bolt slide the bolt through the hole in the bracket, lining up with the hole on the pivot arm. Underneath the bracket use a 1/2” flat washer and 1/2”-13 Hex nut you will use a 3/4” socket and a crescent wrench to tighten the bolt. Repeat this step for all three pivot arms.
- **1.20** Install pivot rotation pin TPIN-3/8x1 (1 provided per system) in your preferred column, install using #10-32 socket headed cap screw and #10-32 flange nut
- **1.21** After each pivot arm has been installed you will need to install the truck net pivot bracket assembly to the end of each pivot arm. These brackets are used to hold the compression bar in place. Using the 1/2”-13X 6 bolt you will slide the bolt through the hole in the bracket and lining up with the hole on the pivot arm. Underneath the bracket assembly, install a 1/2” flat washer and 1/2”-13 Hex nut using a 3/4” socket and a crescent wrench to tighten the bolt. Repeat this step for all three pivot arms. Next step will be installing the net panel to the 3/8” cable.

WARNING **Failure to read, understand, and follow the Installation Manual may result in injury or death.**

Installation of Pivoting Portable Truck Netting System - TN-PIVOT-PORT-53FT

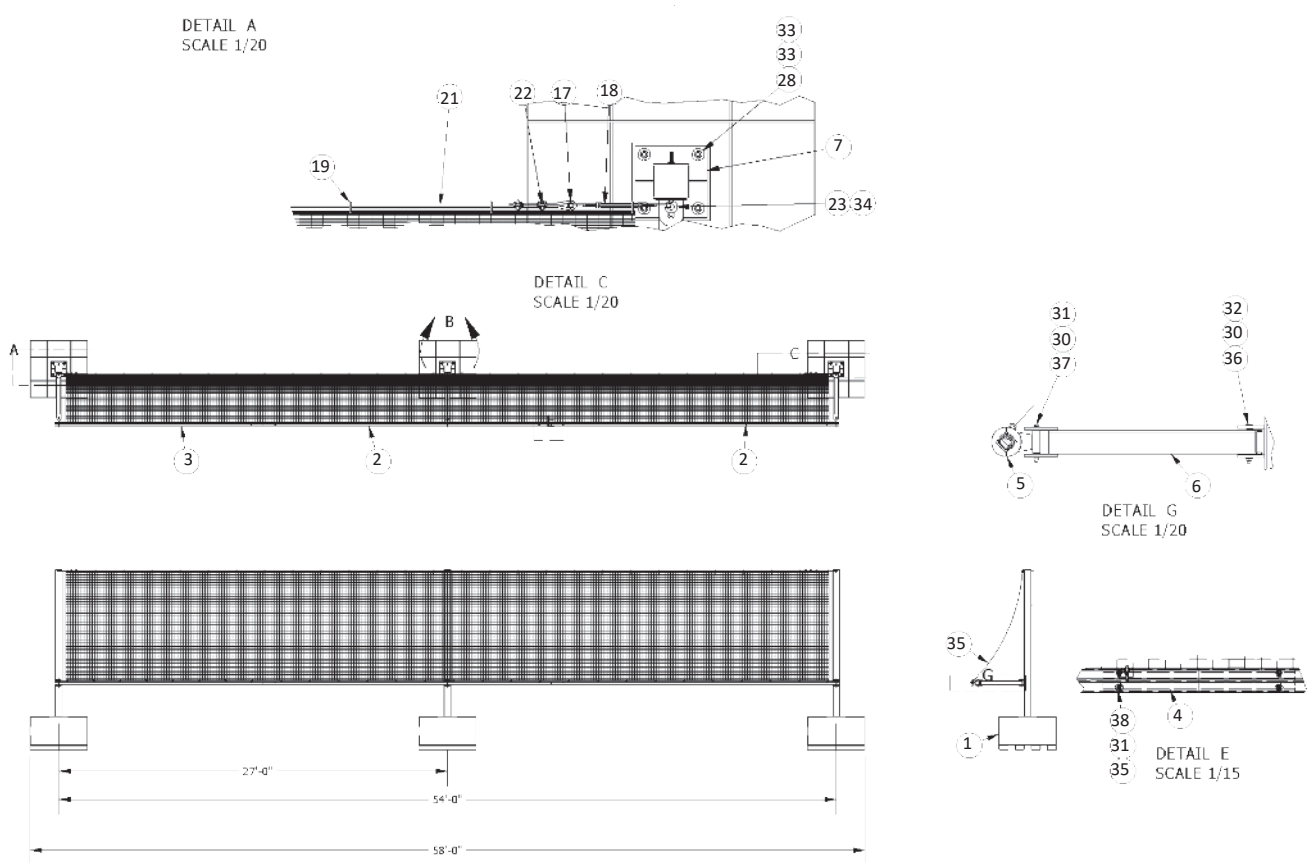

Installation of Netting

- **1.22** Lay netting panel flat on the ground.
- **1.23** Install 5/16” snap hooks at each of the four corners on the webbing of the netting panel and every 2 ft on long sides of net panel. NO snap hooks needed on short sides and do not attach snap hooks directly to net, only on border.
- **1.24** Using 5/16” snap hooks attached netting panel to 3/8” galvanized cable every 2 ft. Allow the net panel to hang loose toward the ground. Next, install the compression bar.

Netting Specifications	
Part#	DPP41186
Material	HTPP - High Tenacity Polypropylene
Style	Raschel Knotless Netting
Mesh Size	4" Square Mesh
Flame Retardant Test	NFPA701
UV Treatment	UV Stabilized
Color	Black
Border	Polypropylene Black Webbing

WARNING **Failure to read, understand, and follow the Installation Manual may result in injury or death.**

Installation of Pivoting Portable Truck Netting System - TN-PIVOT-PORT-53FT

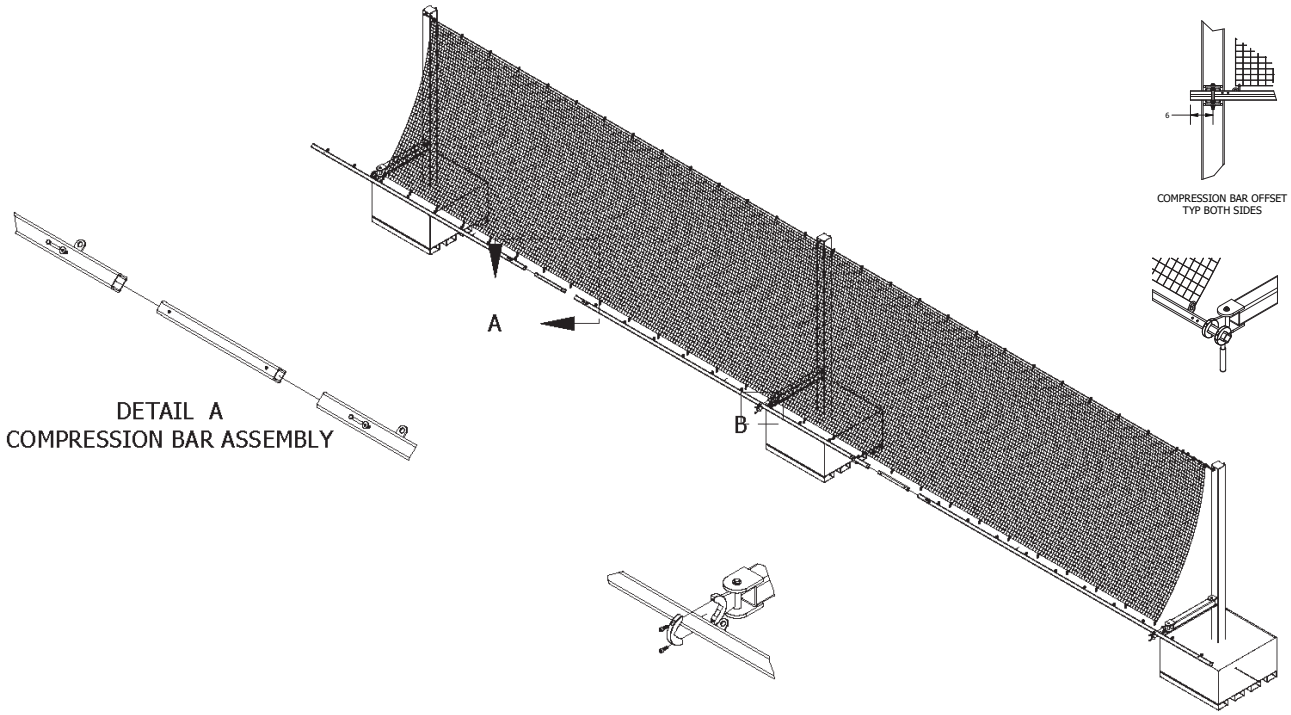

Installation of Netting and Compression Bar

- **1.25** The compression bar consist of three tubes with welded eyes and two splice tubes to connect them. Lay all three pieces of compression bars on the ground. Insert the splice tube into an open end of pivot tube (7 ft) and attach with 3/8 Hex bolt, 3/8 washer & 3/8 Hex flange nut. Assemble Pivot tube (24 ft) to the other end of the splice making sure that the welded eyes are in line. Repeat to attach the last Pivot tube (24 ft) to the other end of the assembled Pivot tube (24 ft) with the last splice tubes. Make sure all welded eyes are in line.
- **1.26** Three people are needed to attach the compression bar to the pivot arms. The arms will all need to be engaged (opened up all the way). Start by using the allen key to remove one side of the two-part shaft collar of the pivot arm bracket. Two bolts per collar, top and bottom.
- **1.27** Once the collars have been removed, two people will hold the compression bar against the pivot arm bracket collar. A third person will reinstall the shaft collar wrapping around the compression bar using the allen key. Before tightening the allen screws all the way, make sure the welded eyes on the compression bar are aligned facing upwards.
- **1.28** After the compression bar has been installed, attach the net to the compression bar approximately every 2 ft using the 5/16” snap hooks.
- **1.29** Install pivot handle in a convenient location, clamp onto pivot bar using a 5/16 allan key.
- **1.30** Test the system by opening and closing the swinging arms. To relocate the pivoting portable system follow all instructions in reverse. Starting with disconnecting the net from the compression bar, removing the compression bar, disconnecting the net from the cable and disconnecting the 3/8” cable. Once these steps have been completed, the portable bases with the columns attached may be moved to a new location or an area to be stored.

WARNING **Failure to read, understand, and follow the Installation Manual may result in injury or death.**

Installation of Column Mount Truck Netting System - TN-COL-4-6-53FT

Hardware Included			
Item#	**Quantity**	**Description**	**Part#**
11	1	Truck Net Column Bracket Front Mid	TN-COL-INT
12	2	Truck Net Column Bracket Front Ends	TN-COL-END
13	3	Truck Net Column Bracket Back	TN-COL-BACK
17	2	3/8” Light Duty Thimbles	THIMLD-3/8
18	1	½” X 6” Turnbuckle Jaw to Jaw	TBJJ1/2X6
19	43	5/16” Snap Hooks	SNAPHK-5/16
20	1	Net Panel 2", DPP41186, 8'6" X 53', Black, Web	HW-NET-53FT
21	1	3/8” Galvanized Cable	HW-GAC
22	4	3/8” Wire Rope Clips	HDCLIP-3/8
25	15	Stake Pockets	2001868
27	12	Threaded Rod 1/2-13	1013391
34	24	HX NT Flng 1/2-13	1006562

Tools Needed

- Tape measure, marker, hammer drill, electrical tape, 3/4” socket, crescent wrenches, torque wrench, protective glasses and gloves.
- Personal Protection Equipment, lifts and material handling equipment as required to complete the install safely.

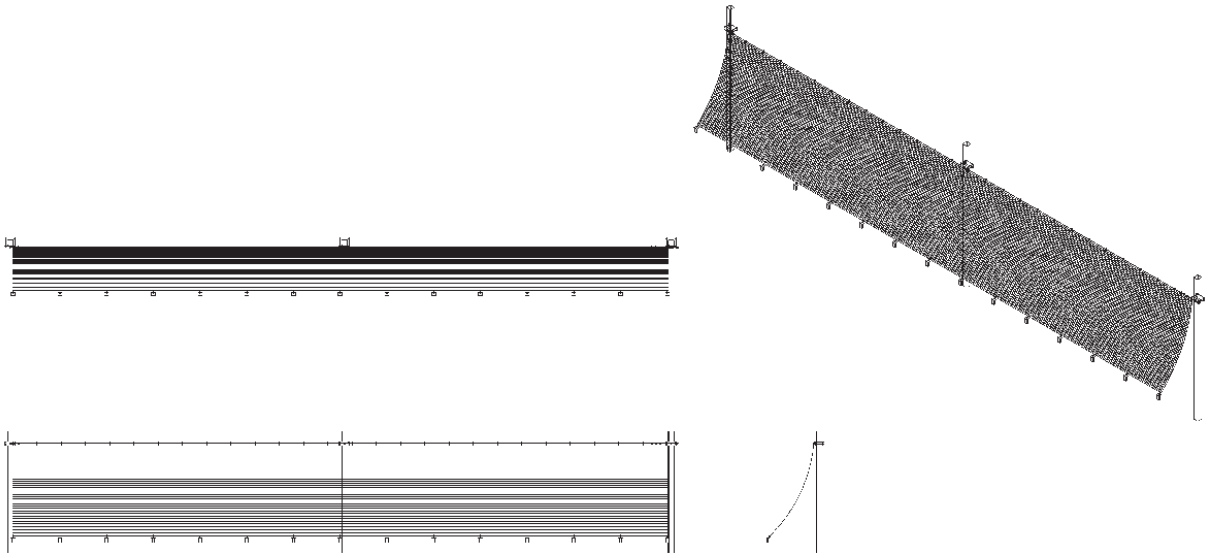

WARNING **Failure to read, understand, and follow the Installation Manual may result in injury or death.**

Installation of Column Mount Truck Netting System - TN-COL-4-6-53FT

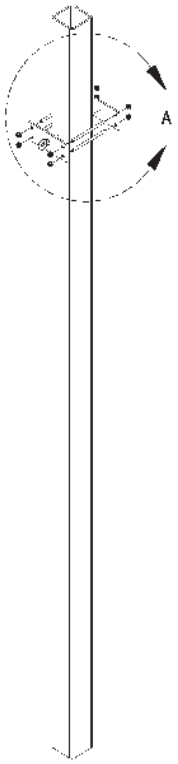

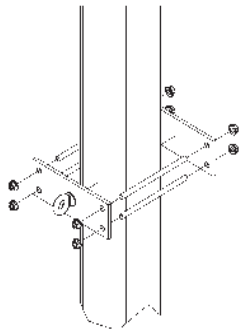

DETAIL A
COLUMN INSTALL START/END

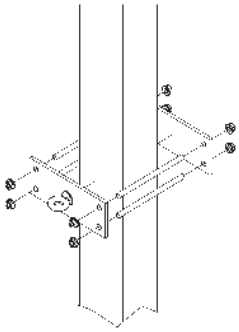

DETAIL A
COLUMN INSTALL INTERMEDIATE

Installation of Columns

- **1.1** Installation of TN-COL-4-6-53FT netting system begins with the installation of the column mount brackets. To start, determine the height for the installation of the brackets by referencing drawings provided. Install three brackets; two end brackets with a horizontal welded eye and one middle bracket with a vertical welded eye.
- **1.2** To install the bracket, lift equipment is needed to reach the specified height along with a 3/4” socket and a crescent wrench. Install an end or mid column bracket with the following items; one front end bracket or one mid end bracket, one column back bracket, four threaded rods 1/2”-13, and 8 Hex nut 1/2”-13. With front bracket against front face side of existing column insert four threaded rods 1/2”-13 and thread one Hex nut 1/2”-13 for each threaded rod on the front.
- **1.3** Holding the front plate, slide one column bracket back over each threaded rod and thread one Hex nut 1/2”-13 for each threaded rod on the back. Using a 3/4” socket and a crescent wrench to tighten all bolts. Repeat steps 1.2 and 1.3 for remaining two brackets. The two end brackets have horizontal welded eyes and mid bracket has a vertical welded eye.

WARNING **Failure to read, understand, and follow the Installation Manual may result in injury or death.**

Installation of Column Mount Truck Netting System - TN-COL-4-6-53FT

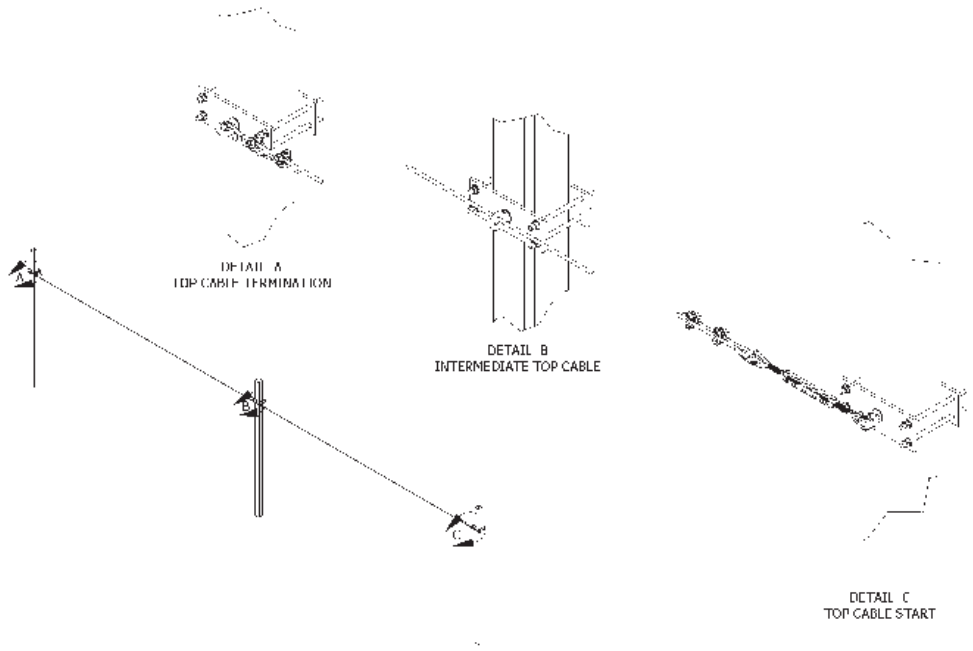

Installation of Cable

- **1.4** Open the 1/2” X 6” turnbuckle until 1/2” of thread is showing on each side. This will allow the installer to tighten the cable once installed.
- **1.5** Attach one end of 1/2” X 6” turnbuckle to one of the end columns 1/2” horizontal eye bolts.
- **1.6** Attach one 3/8” light duty thimble to other end of 1/2” X 6” turnbuckle.
- **1.7** Wrap 3/8” galvanized cable around 3/8” light duty thimble. Turn back 6-1/2” of 3/8” cable from thimble. Put first clip on one saddle width from “dead end”. Position U-bolt portion of clip over the dead end (cut end portion of rope). Saddle of wire clip is to be against the live end (load carrying part of the rope). See page 35 for diagram. Torque nuts to 45 ft-lbs.
- **1.8** Put second clip close to thimble without binding it. Install nuts firmly but do not yet tighten to proper torque.
- **1.9** Apply light tension to wire rope assembly and tighten all nuts evenly to proper torque.
- **1.10** Run 3/8” cable through vertical eyebolt installed on center column.
- **1.11** On the other end of the column, install 3/8” light duty thimble around horizontal 1/2” eyebolt already installed.
- **1.12** Wrap 3/8” galvanized cable around 3/8” light duty thimble. Turn back 6-1/2” of 3/8” cable from thimble. Put first clip on one saddle width from “dead end”. Position U-bolt portion of clip over the dead end (cut end portion of rope). Saddle of wire clip is to be against the live end (load carrying part of the rope). See page 35 for diagram. Torque nuts to 45 ft-lbs.
- **1.13** Using electrical tape, wrap overhang of cable at 6-1/2” and cut of remaining cable at the electrical tape mark.
- **1.14** Take up the cable tension by turning the turnbuckle. DO NOT allow the cable to twist while the turnbuckle is being tightened. DO NOT over tighten the turnbuckle.
- **1.15** Inspect wire rope clip nuts before and after install. In the event of a product falling into the net system, reinspect the wire rope clips and re-torque as needed. When loads are applied, the wire rope stretches slightly, so the clips and turnbuckles may need to be retorqued.

WARNING **Failure to read, understand, and follow the Installation Manual may result in injury or death.**

Installation of Column Mount Truck Netting System - TN-COL-4-6-53FT

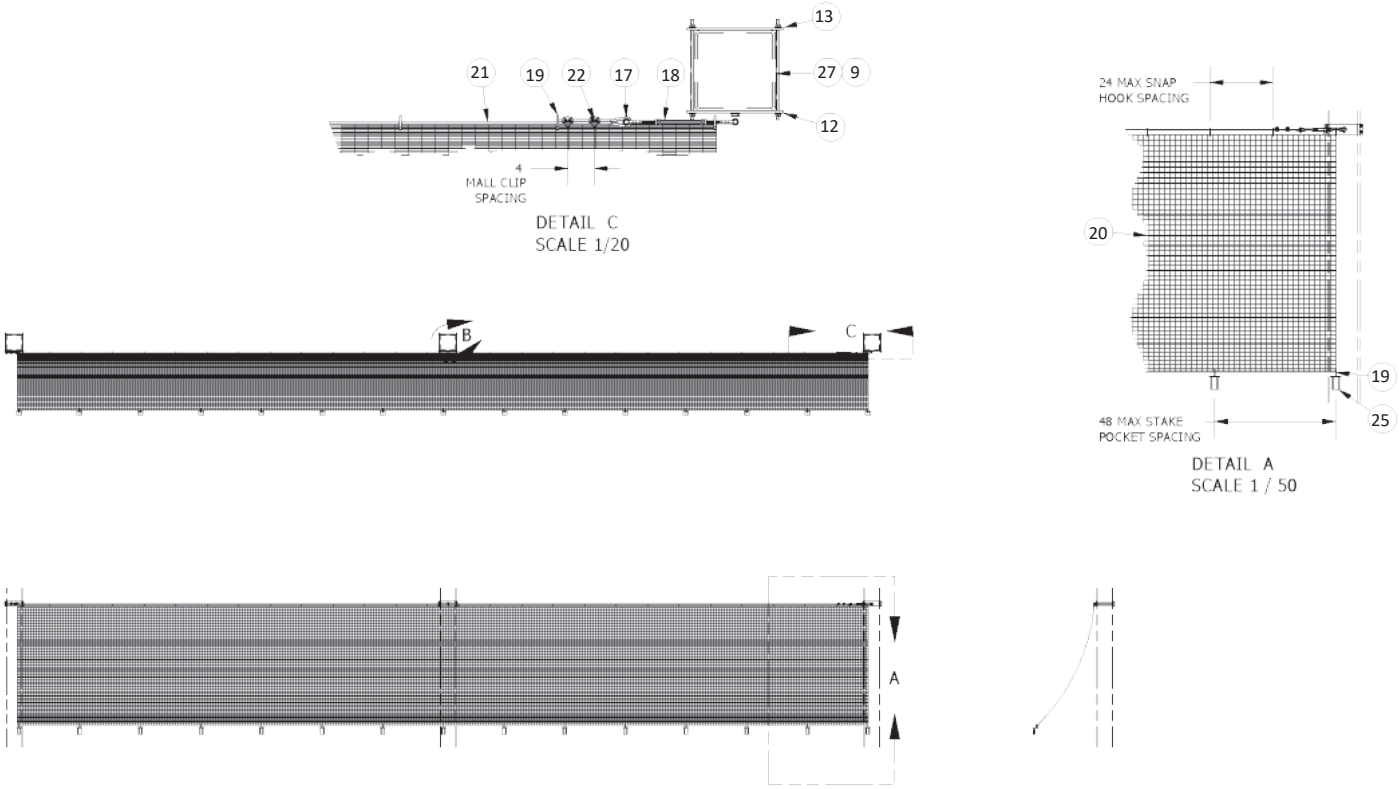

Installation of Netting

- **1.16** Lay netting panel flat on the ground.
- **1.17** Install 5/16” snap hooks at each of the four corners on the webbing of the netting panel and then every 2 ft on long sides of net panel. NO snap hooks are needed on short sides and DO NOT attach snap hooks directly to net only on border.
- **1.18** Using 5/16” snap hooks attached netting panel to 3/8” galvanized cable approximately every 2 ft.
- **1.19** While the netting panel is hanging from the 3/8” cable towards the floor, attach stake pockets to the 5/16” snap hooks that are closest to the floor every 4 ft.

Netting Specifications	
Part#	DPP41186
Material	HTPP - High Tenacity Polypropylene
Style	Raschel Knotless Netting
Mesh Size	4" Square Mesh
Flame Retardant Test	NFPA701
UV Treatment	UV Stabilized
Color	Black
Border	Polypropylene Black Webbing

WARNING **Failure to read, understand, and follow the Installation Manual may result in injury or death.**

Installation of Flange Mount Truck Netting System - TN-FLG-6-8X1-2-53FT

Hardware Included			
Item#	**Quantity**	**Description**	**Part#**
8	6	Truck Net Flange Bracket	TN-FLG
11	1	Truck Net Column Bracket Front Mid	TN-COL-INT
12	2	Truck Net Column Bracket Front Ends	TN-COL-END
17	2	3/8” Light Duty Thimbles	THIMLD-3/8
18	1	1/2” X 6” Turnbuckle Jaw to Jaw	TBJJ1/2X6
19	43	5/16” Snap Hooks	SNAPHK-5/16
20	1	Net Panel 2”, DPP41186, 8’6” X 53’, Black, Web	HW-NET-53FT
21	1	3/8” Galvanized Cable	HW-GAC
22	4	3/8” Wire Rope Clips	HDCLIP-3/8
25	15	Stake Pockets	2001868
26	12	Heavy Hex Nut –1/2-13 Plain	1013790
29	24	FW - 1/2	1011400
34	12	HHCS 1/2-13 X 2.25	1006562

Tools Needed

- Tape measure, marker, hammer drill, electrical tape, 3/4” socket, 7/8” socket, crescent wrenches, torque wrench, protective glasses and gloves.
- Personal Protection Equipment, lifts and material handling equipment as required to complete the install safely.

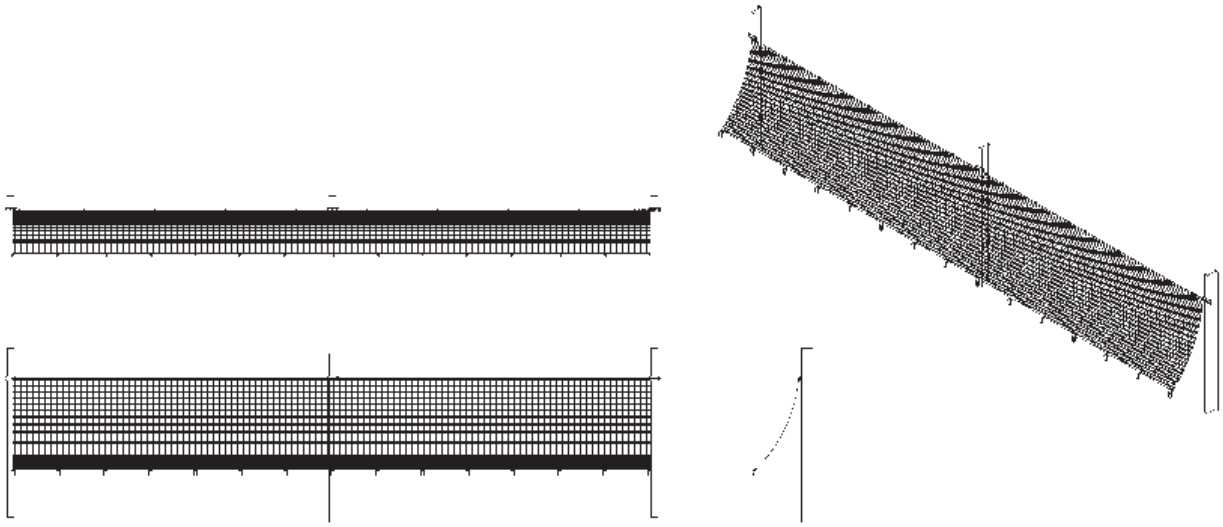

WARNING **Failure to read, understand, and follow the Installation Manual may result in injury or death.**

Installation of Flange Mount Truck Netting System - TN-FLG-6-8X1-2-53FT

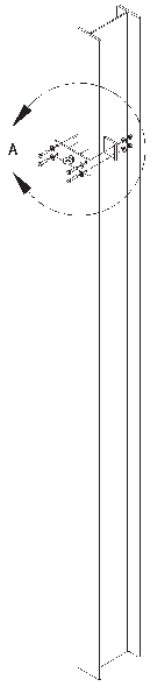

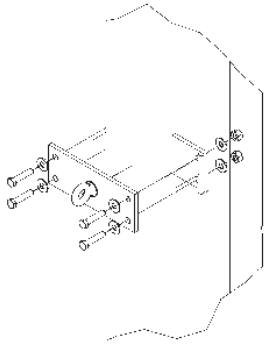

DETAIL A
INTERMEDIATE BRACKETS

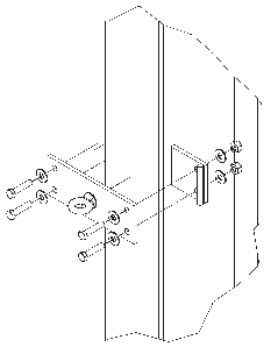

DETAIL A
START/END BRACKETS

Installation of Columns

- **1.1** Installation of TN-FLG-6-8X1-2-53FT netting system begins with the installation of the column flange mount brackets. To start, determine the height for the installation of the brackets by referencing drawings provided. Install three brackets; two end brackets with a horizontal welded eye and one end bracket with a vertical welded eye.
- **1.2** To install bracket use lift equipment to reach specified height along with a 7/8” socket and a crescent wrench. To install an end or mid flange bracket use the following items; one front end bracket or one mid end bracket, two flange bracket 1/2”, four 1/2”-13 heavy Hex nut, four 1/2”-13 x 2.25 Hex head bolt, eight 1/2” flat washers. With bracket against flange side of existing column front bracket insert one 1/2”-13 x 2.25 Hex head bolt and one 1/2” flat washer through each hole.
- **1.3** Holding the front plate slide one 1/2” flange bracket over each bolt and slide 1/2” washer and 1/2”-13 x 2.25 Hex head bolt. Using a 7/8” socket and a crescent wrench to tighten all bolts. Repeat steps 1.2 and 1.3 for remaining two brackets. Note that you two end column brackets have horizontal welded eyes and mid bracket has vertical welded eye.

WARNING **Failure to read, understand, and follow the Installation Manual may result in injury or death.**

Installation of Flange Mount Truck Netting System - TN-FLG-6-8X1-2-53FT

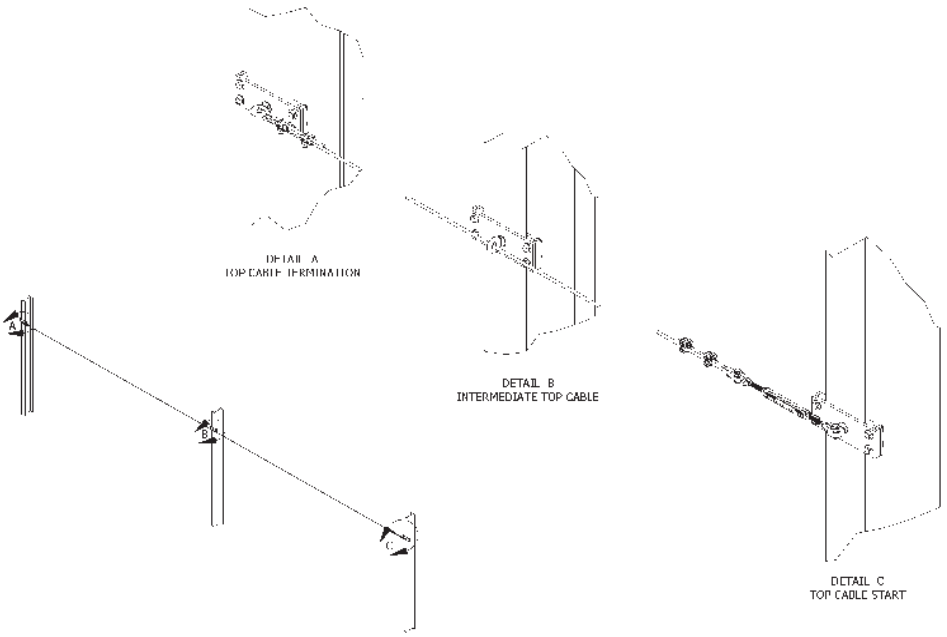

Installation of Cable

- **1.4** Open the 1/2” X 6” turnbuckle until 1/2” of thread is showing on each side. This will allow the installer to tighten the cable once installed.
- **1.5** Attach one end of 1/2” X 6” turnbuckle to one of the end columns 1/2” horizontal eye bolts.
- **1.6** Attach one 3/8” light duty thimble to other end of 1/2” X 6” turnbuckle.
- **1.7** Wrap 3/8” galvanized cable around 3/8” light duty thimble. Turn back 6-1/2” of 3/8” cable from thimble. Put first clip on one saddle width from “dead end”. Position U-bolt portion of clip over the dead end (cut end portion of rope). Saddle of wire clip is to be against the live end (load carrying part of the rope). See page 35 for diagram. Torque nuts to 45 ft-lbs.
- **1.8** Put second clip close to thimble without binding it. Install nuts firmly but do not yet tighten to proper torque.
- **1.9** Apply light tension to wire rope assembly and tighten all nuts evenly to proper torque.
- **1.10** Run 3/8” cable through vertical eyebolt installed on center column.
- **1.11** On the other end of the column, install 3/8” light duty thimble around horizontal 1/2” eyebolt already installed.
- **1.12** Wrap 3/8” galvanized cable around 3/8” light duty thimble. Turn back 6-1/2” of 3/8” cable from thimble. Put first clip on one saddle width from “dead end”. Position U-bolt portion of clip over the dead end (cut end portion of rope). Saddle of wire clip is to be against the live end (load carrying part of the rope). See page 35 for diagram. Torque nuts to 45 ft-lbs.
- **1.13** Using electrical tape, wrap overhang of cable at 6-1/2” and cut of remaining cable at the electrical tape mark.
- **1.14** Take up the cable tension by turning the turnbuckle. DO NOT allow the cable to twist while the turnbuckle is being tightened. DO NOT over tighten the turnbuckle.
- **1.15** Inspect wire rope clip nuts before and after install. In the event of a product falling into the net system, reinspect the wire rope clips and re-torque as needed. When loads are applied, the wire rope stretches slightly, so the clips and turnbuckles may need to be retorqued.
-

WARNING **Failure to read, understand, and follow the Installation Manual may result in injury or death.**

Installation of Flange Mount Truck Netting System - TN-FLG-6-8X1-2-53FT

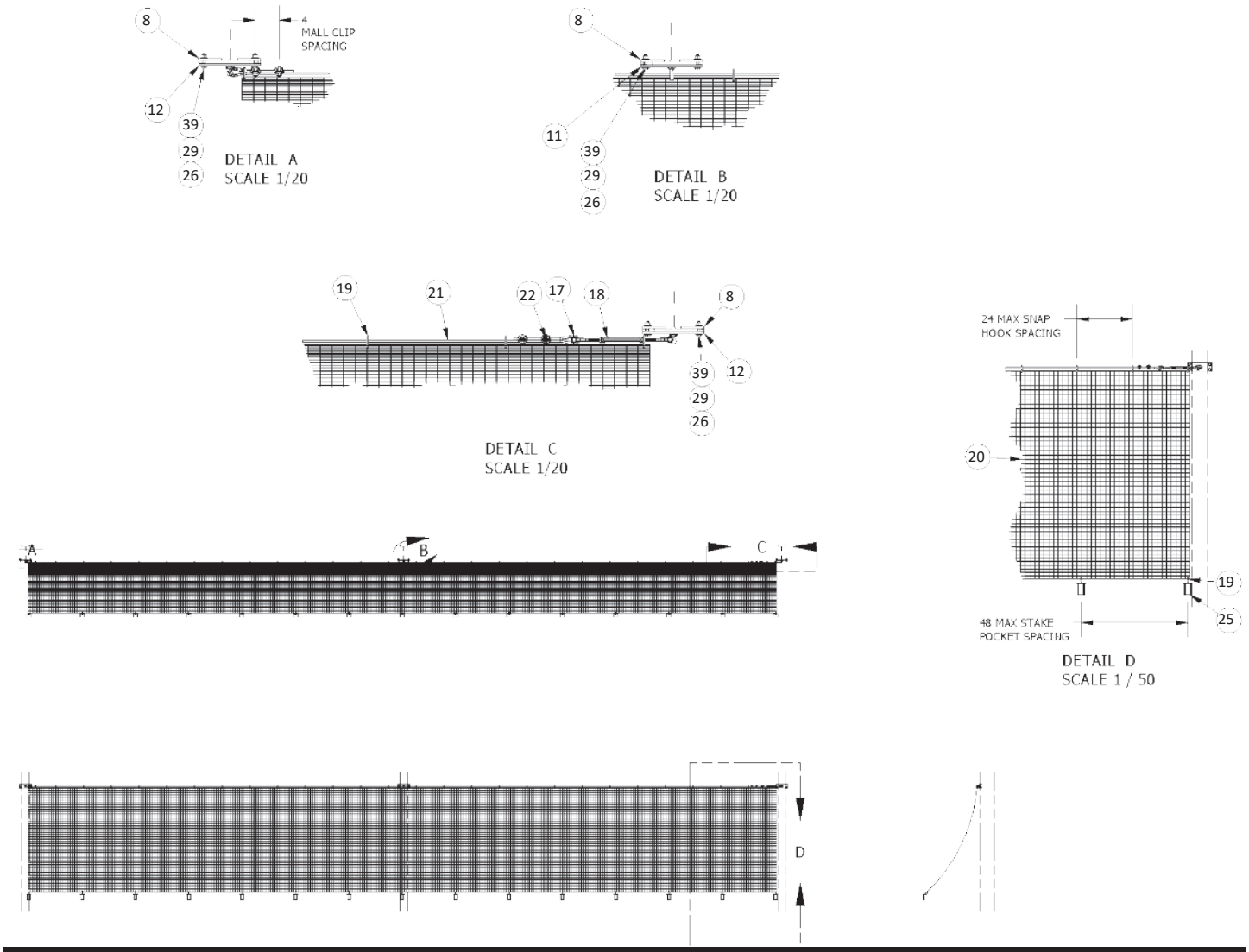

Installation of Netting

- **1.16** Lay netting panel flat on the ground.
- **1.17** Install 5/16” snap hooks at each of the four corners on the webbing of the netting panel and then every 2 ft on long sides of net panel. NO snap hooks are needed on short sides and DO NOT attach snap hooks directly to net only on border.
- **1.18** Using 5/16” snap hooks attached netting panel to 3/8” galvanized cable approximately every 2 ft.
- **1.19** While the netting panel is hanging from the 3/8” cable towards the floor, attach stake pockets to the 5/16” snap hooks that are closest to the floor every 4 ft.

Netting Specifications	
Part#	DPP41186
Material	HTPP - High Tenacity Polypropylene
Style	Raschel Knotless Netting
Mesh Size	4" Square Mesh
Flame Retardant Test	NFPA701
UV Treatment	UV Stabilized
Color	Black
Border	Polypropylene Black webbing

WARNING **Failure to read, understand, and follow the Installation Manual may result in injury or death.**

Installation of Wall Mounted Truck Netting System - TN-GAP-53FT

Hardware Included			
Item#	**Quantity**	**Description**	**Part#**
9	22	HX NT Flng - 1/2-13	TN-FLANGENT
25	15	Stake Pockets	2001868
24	22	Wedge Anchor 1-2 X 3 3-4	9000975
15	1	Truck Net Gap Bar Mount 4 ft	TN-BAR-4FT
14	5	Truck Net Gap Bar Mount 10 ft	TN-BAR-10FT
19	42	5/16” Snap Hooks	SNAPHK-5/16
20	1	Net Panel 2”, DPP41186, 8’6” X 53’, Black, Web	HW-NET-53FT

Tools Needed

- Tape measure, marker, hammer drill, electrical tape, 3/4” socket, crescent wrenches, torque wrench, protective glasses, Hilti epoxy and gloves.
- Personal Protection Equipment, lifts and material handling equipment as required to complete the install safely.

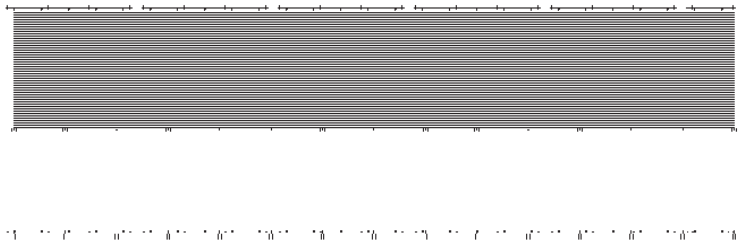

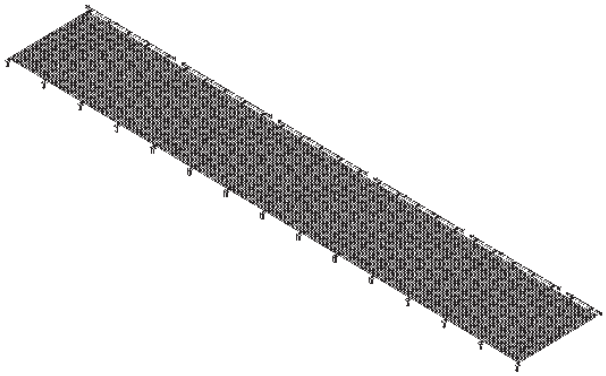

WARNING **Failure to read, understand, and follow the Installation Manual may result in injury or death.**

Installation of Wall Mounted Truck Netting System - TN-GAP-53FT

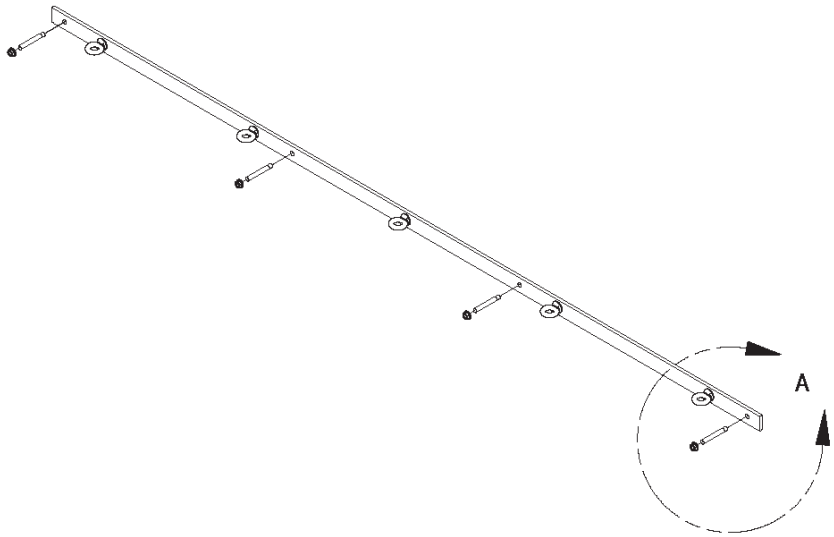

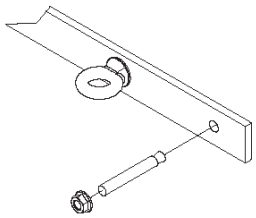

DETAIL A
ANCHOR INSTALL

Installation of Gap Bar

- **1.1** Installation of TN-GAP-53FT netting system begins with the installation of the gap bars. To start mark the truck bay wall location of where each gap bar will need to be installed and mark the location of each anchor point (reference drawings provided for exact location).
- **1.2** Using a hammer drill install the 1-2 x 3 3-4 wedge anchors, there will be 4 anchors per 10 ft gap bar and 2 anchors per 4 ft gap bar.
- **1.3** Once anchors are installed, line up the gap bar (10 ft Item and 4 ft Item with anchors. Insert Hex nut 1/2-13 and tighten Hex nut using 3/4” socket. Repeat for all anchor locations. 30 ft-lb torque is required.

WARNING **Failure to read, understand, and follow the Installation Manual may result in injury or death.**

Installation of Wall Mounted Truck Netting System - TN-GAP-53FT

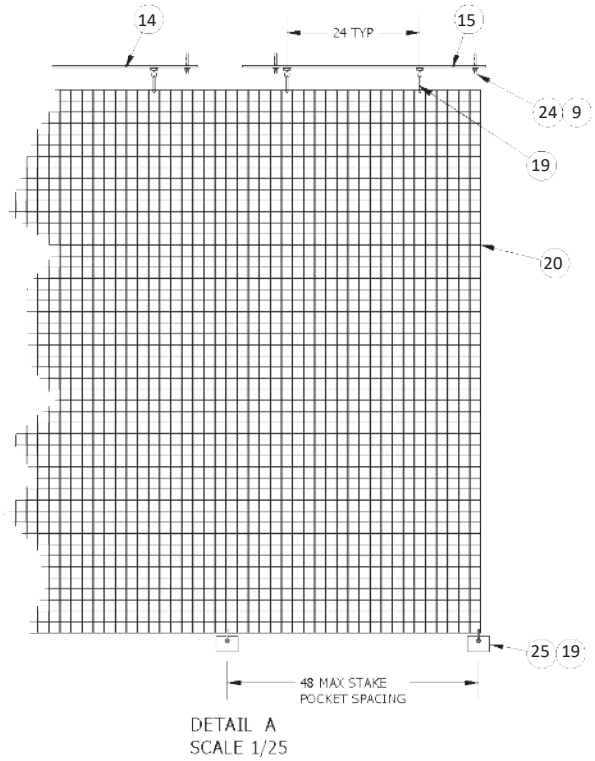

Netting Specifications	
Part#	DPP41186
Material	HTPP - High Tenacity Polypropylene
Style	Raschel Knotless Netting
Mesh Size	4" Square Mesh
Flame Retardant Test	NFPA701
UV Treatment	UV Stabilized
Color	Black
Border	Polypropylene Black Webbing

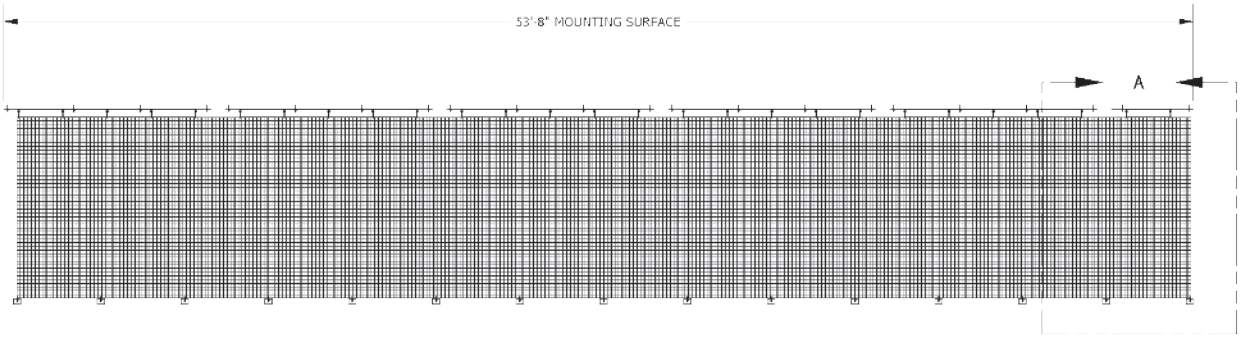

Installation of Netting

- **1.1** Lay netting panel flat on the ground.
- **1.2** Install 5/16” snap hooks at each of the four corners on the webbing of the netting panel and then every 2 ft on long sides of net panel. NO snap hooks are needed on short sides and DO NOT attach snap hooks directly to net only on border.
- **1.3** Using 5/16” snap hooks attached netting panel to 3/8” galvanized cable approximately every 2 ft.
- **1.4** While the netting panel is hanging from the 3/8” cable towards the floor, attach stake pockets to the 5/16” snap hooks that are closest to the floor every 4 ft.

WARNING **Failure to read, understand, and follow the Installation Manual may result in injury or death.**

Installation of Wire Rope Clips

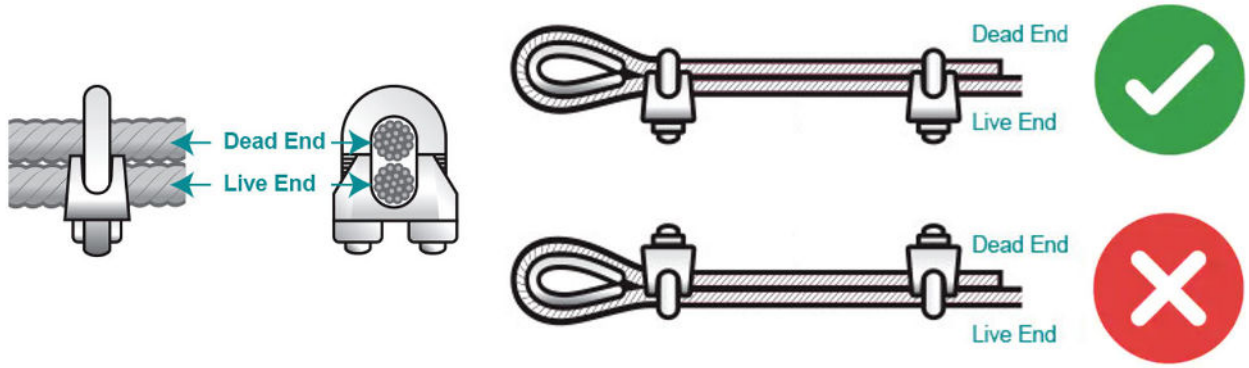

Rope Size	Number of Clips	Torque (ft-lbs)	Amount of Rope Turnback
1/4”	2	15	3-3/4”
3/8”	2	45	6-1/2”

Instructions

- **1.1** Turn back the specified length of wire rope from the thimble (see above). Put first clip one saddle width from “dead end.” Position the U-Bolt portion of the clip over the dead end (cut end portion of rope). The saddle of the wire rope clip is to be against the live end (load carrying part of the rope).
- **1.2** Tighten nuts to recommended torque as per the chart above.
- **1.3** Put the second clip close to the thimble without binding it. Install nuts firmly but do not yet tighten to proper torque.
- **1.4** Apply light tension to wire rope assembly and then tighten all nuts evenly to proper torque.
- **1.5** Inspect wire rope clip nuts before and after install. In the event of a product falling into the net system, re-inspect the wire rope clips and re-torque as needed.
- **1.6** When loads are applied, the wire rope stretches slightly, so the clips may need to be re-torqued.

WARNING **Failure to read, understand, and follow the Installation Manual may result in injury or death.**

WARNING IMPROPER USE OR INSTALLATION OF THIS EQUIPMENT MAY CAUSE INJURY OR DEATH

DO NOT LEAN ON THE NETTING.
DO NOT STAND OR CLIMB ON THE NETTING.
DO NOT USE NETTING AS A TIE-OFF POINT.
DO NOT USE IF ANY COMPONENT IS FOUND DEFECTIVE OR DAMAGED.

DO read and follow this document (installation manual).

Flatbed Safety Solutions are designed and are to be used only for their intended purpose. The use of these netting systems or their components for any other purpose may cause injury or death.

Flatbed Safety Solutions by Liftsafe Fall Protection Inc. & Factory Supply are designed and engineered to prevent falls while working on flatbed trucks. Liftsafe Fall Protection Inc. & Factory Supply does not accept any responsibility for systems that do not follow the enclosed instructions or those that do not use the hardware provided.

These instructions comprise a general installation procedure for the erection of a Flatbed Safety System. It is the position of Liftsafe Fall Protection Inc. & Factory Supply that these types of systems should be installed by a certified, trained installation team. In the event that the customer installs the system themselves, the entire system (nets, cables, etc.) must be inspected regularly by a supervisor to ensure that:
Snap hooks are in place and are positioned a maximum of 24” apart along cable and rope border.

- Netting panels DO NOT exhibit any damage whatsoever.
- System components are NOT damaged in any way.

Liftsafe Fall Protection Inc. & Factory Supply are not responsible for the quality of install preformed by a client after delivery. All netting systems must be inspected regularly.

Note: Net panels should be inspected yearly for any damage, and replaced after 7 years when indoors and not exposed to the elements. Net panels that are outdoor and exposed to the elements should be replaced after 2-3 years.

Net hadware including wire ropes, clips or support columns should be inspected yearly for any damage.

Fall Protection Warranty

Please refer to website for product warranty information.

fallsafetysolutions.com/terms-conditions/ **factorysupply.com/terms-conditions/**

Liftsafe
1574 Eagle St N., Unit C101
Cambridge, ON N3H 4S5
1(800) 977-2005
info@liftsafegroup.com
www.fallsafetysolutions.com

Factory Supply
8001 Tower Point Drive
Charlotte, NC 28227
1(888) 242-3045
sales@factorysupply.com
www.factorysupply.com